

Bravo

Evolution II
Professional II
Sofer 2P II

Operating manual

Translation of the original instructions

CE

D432434XA vers.**8.0**

EN

© 2011 SILCA S.p.A - Vittorio Veneto

This manual has been drawn up by SILCA S.p.A.
All rights reserved. No part of this publication may be reproduced or used in any form or by any means (photocopying, microfilm or other) without the written permission of SILCA S.p.A.

Edition: June 2021

Printed in Vittorio Veneto
by SILCA S.p.A.
via Podgora, 20 (Z.I.)
31029 VITTORIO VENETO (TV) - Italy

IMPORTANT NOTE: *in compliance with current regulations relating to industrial property, we hereby state that the trade-marks or trade names mentioned in our documentation are the exclusive property of authorized manufacturers of locks and users.*
Said trade-marks or trade names are nominated only for the purposes of information so that any lock for which our keys are made can be rapidly identified.

CONTENTS

GUIDE TO THE MANUAL 1
GENERAL INTRODUCTION 2

1 TRANSPORT 4

1.1 Packing 4
1.2 Transport 4
1.3 Unpacking 4
1.4 Handling the machine 5

2 WORKING PARTS 6

3 MACHINE DESCRIPTION 7

3.1 Safety 9
3.2 Further Risks 9
3.3 Technical Data 9
3.4 Electric circuit 10

4 ACCESSORIES PROVIDED 11

5 MACHINE INSTALLATION AND PREPARATION 12

5.1 Checking for damage 12
5.2 Environmental conditions 12
5.3 Positioning 12
5.4 Description of work station 13
5.5 Graphics 13
5.6 Separate parts 13
5.7 Connection to the mains 13
5.8 Checking and setting 14
5.9 Calibration 14

6 CUTTING OPERATIONS 16

6.1 Key cutting 16
6.2 Cutting pin keys 17

7 CLEANING AND MAINTENANCE 19

7.1 Preparing for maintenance 19
7.2 Replacing the cutting tool 19
7.3 Replacing the brush 20
7.4 Replacing the tracer point 20
7.5 Replacing the swarf protection 20
7.6 Regulating of maximum carriage depth 21
7.7 Replacing the fuses 21
7.8 Access to bottom compartment 22
7.9 Replacing the master switch 22
7.10 Replacing the condenser (motor) and/or feeder (lamp) 23
7.11 Replacing the microswitch 24
7.12 Replacing the switch and/or push button 25
7.13 Replacing and/or tightening the belt 26
7.14 Replacing the single speed motor 27
7.15 Replacing the light bulb 28
7.16 Replacing carriage spring 28

8 DISPOSAL 30

9 ASSISTANCE 31

9.1 How to request service 31

GUIDE TO THE MANUAL

This manual is a guide to the use of key-cutting machines in the BRAVO range.
Read it carefully; it is essential if you wish to operate your machine safely and efficiently.

CONSULTATION

The contents of the manual are divided into sections relating to:

- Transport and handling ..... Ch. 1
- Description of machine and safety devices ..... Ch. 2-3-4
- Proper use of machine ..... Ch. 5-6
- Cleaning and Maintenance ..... Ch. 7

TECHNICAL TERMS

Common technical terms are used in this manual. To assist those with little experience of key cutting, below is an illustration of the terms used for the different parts of keys.

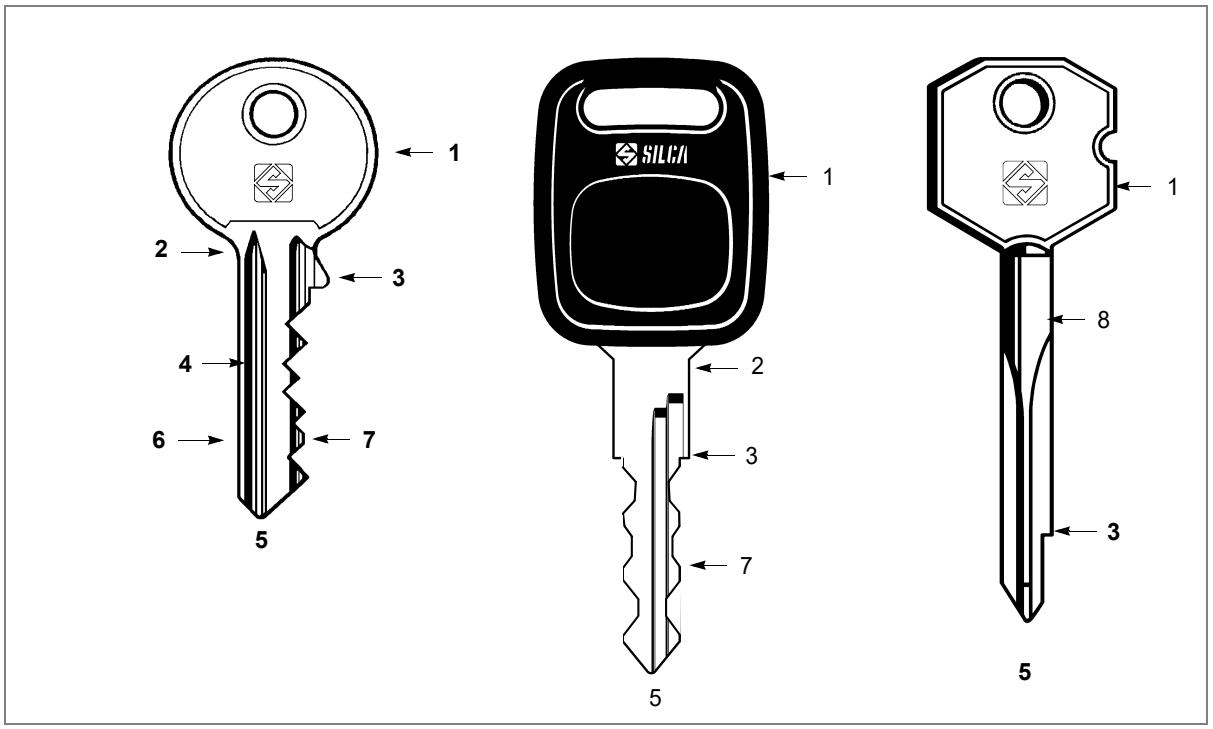

Fig. 1

1) Head
2) Rim
3) Stop
4) Stem
5) Tip
6) Back
7) Cuts
8) Stem

Copyright Silca 2021

GENERAL INTRODUCTION

The BRAVO key-cutting machine has been designed according to the specifications of the Machine Directives. From the design stage risks for the operator have been eliminated in all areas: transport, key-cutting, regulation and maintenance.
Other risks have been eliminated by the use of protective devices for the operator.
The protective devices used are designed not to provoke further risks and, above all, they cannot be ignored unless deliberately cut out. They do not hinder visibility of the work area.
A special adhesive label is attached to the machine warning the operator to use goggles during the cutting operations, and this is strongly recommended in this manual.
The material used in the manufacture of this machine and the components employed during use of the machine are not dangerous and their use complies with standards.

USE

BRAVO is a key-cutting machine and must be installed and used according to the rules and specifi cations established by the manufacturer.
The key-cutting machine must be used only by skilled personnel (professional use).
The key-cutting machine is designed for use on business or industrial premises (e.g. hardware shops, key cutting centers, etc...). This equipment should not be used where children may be present.
Any other use different from that indicated in this manual will cause the forfeiture of all customers' rights to make claims on Silca S.p.A. and may be an unknown source of hazard for the operator or third parties.

It is therefore indispensable to read the operating manual carefully in order to make the best use of the BRAVO and benefit from its potential.

Instructions manual

The instructions manual provided with the machine is essential to its proper use and to carry out the necessary maintenance.
We therefore recommend protecting the manual from damage in a safe sheltered place, easily to hand for quick consultation.

FURTHER RISKS

There are further risks arising from the use of the machine (see chap. 3.2 on page 9.).

PROTECTION AND SAFETY PRECAUTIONS FOR THE OPERATOR

The BRAVO key-cutting machine is built entirely to standards. The operations for which it has been designed are easily carried out at no risk to the operator.
The adoption of general safety precautions (wearing protective goggles) and observation of the instructions provided by the manufacturer in this manual eliminate all human error, unless deliberate.
The BRAVO key-cutting machine is designed with features which make it completely safe in all its parts.

- **Power supply**

The key-cutting machine is powered by electricity supplied through a separable earthed plug.

- **Start-up**

The machine is turned on by means of the master switch located on the right-hand side. The switch has a safety function that prevents untimely start-up when voltage returns after a cut-out.

- **Operation**

The machine is turned on by means of a switch located on the left-hand side.

- **Illlumination**

The work area is illuminated by a neon lamp operated by means of the master switch.

- **Maintenance**

The operations to regulate, service, repair and clean the machine have been devised in the simplest and safest way possible. There is no danger of removable parts being re-placed wrongly or unsafely.

Copyright Silca 2021

MACHINE IDENTIFICATION

The BRAVO key-cutting machine is provided with an identification label which shows the serial number (fig. 2).

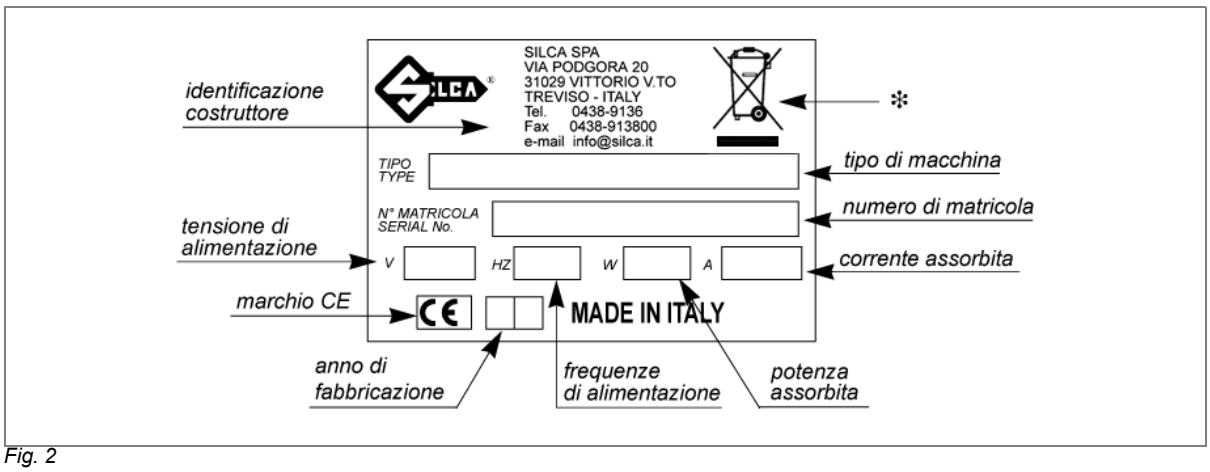

Fig. 2

(*) see ch.8 "DISPOSAL", page 30.

1 TRANSPORT

The BRAVO key-cutting machine is easily transported and is not dangerous to handle. The machine must be placed in its packaging and carried manually by two persons.

1.1 Packing

The BRAVO is packed in a strong cardboard box, the dimensions of which are shown in fig. 3, sufficiently robust to be used for storing the machine for long periods.

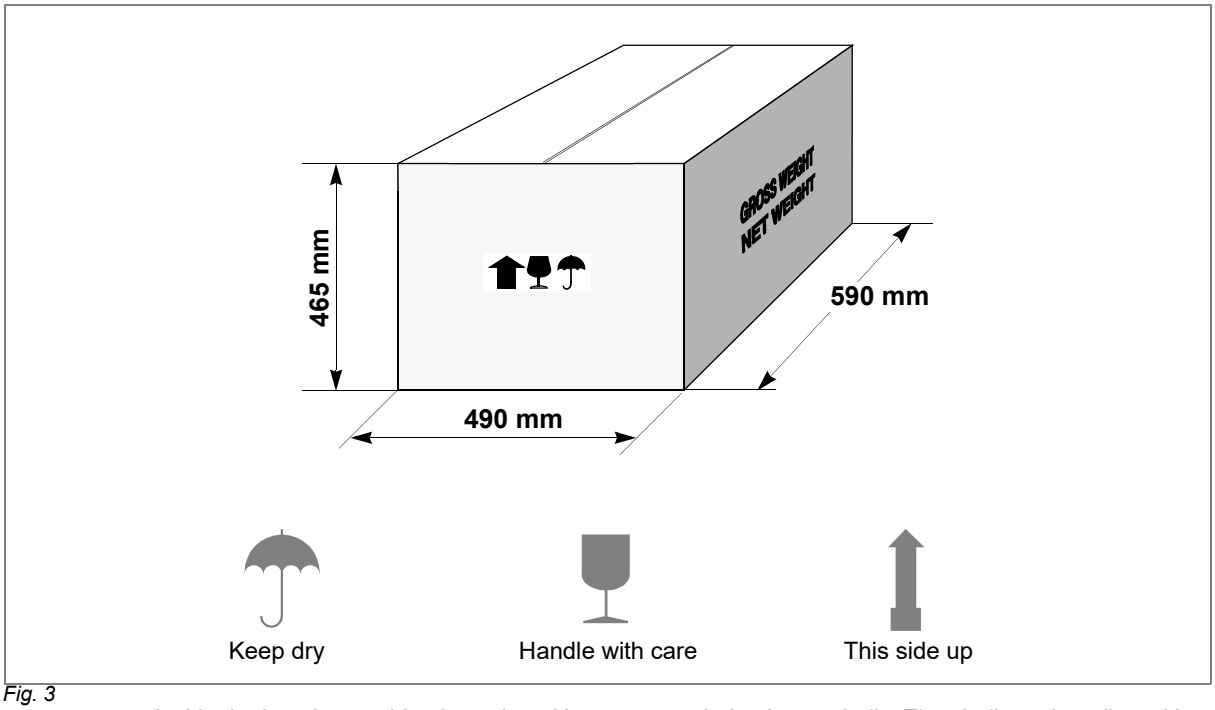

Fig. 3

Inside the box the machine is enclosed in two expanded polymer shells. The shells and cardboard box ensure safe transportation and protect the machine and all its parts.

1.2 Transport

To ensure that the BRAVO key-cutting machine remains integral, it must always be moved in its packaging, with the carriage released.

1.3 Unpacking

To remove the machine from the packing box:

1) cut the straps with scissors and remove.
2) prise off the staples;.
3) open the box without damaging it as it may be used again (e.g. removals, dispatch to the manufacturers for repairs or servicing).
4) check the contents of the box, which should comprise:
   - 1 BRAVO key-cutting machine packed in a protective shell
   - 1 set of documents, including: operating manual, spare parts list and guarantee
   - 1 connecting wire
   - 1 accessory container
5) remove the key-cutting machine from the protective shell.

Copyright Silca 2021

1.4 Handling the machine

When the BRAVO has been unpacked, place it directly on its workbench.
This operation can be carried out by one or two persons, **firmly holding the base and no other part, to lift and carry the machine** (fig.4).

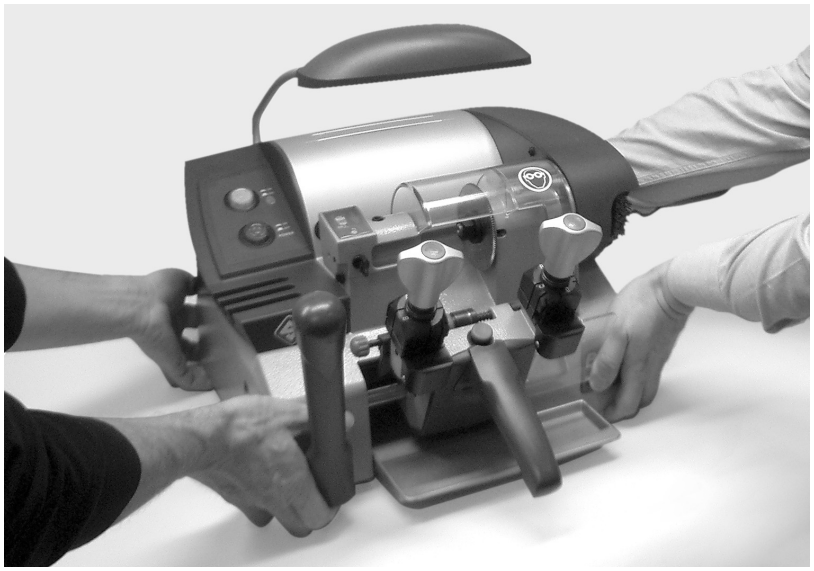

Fig. 4

2 WORKING PARTS

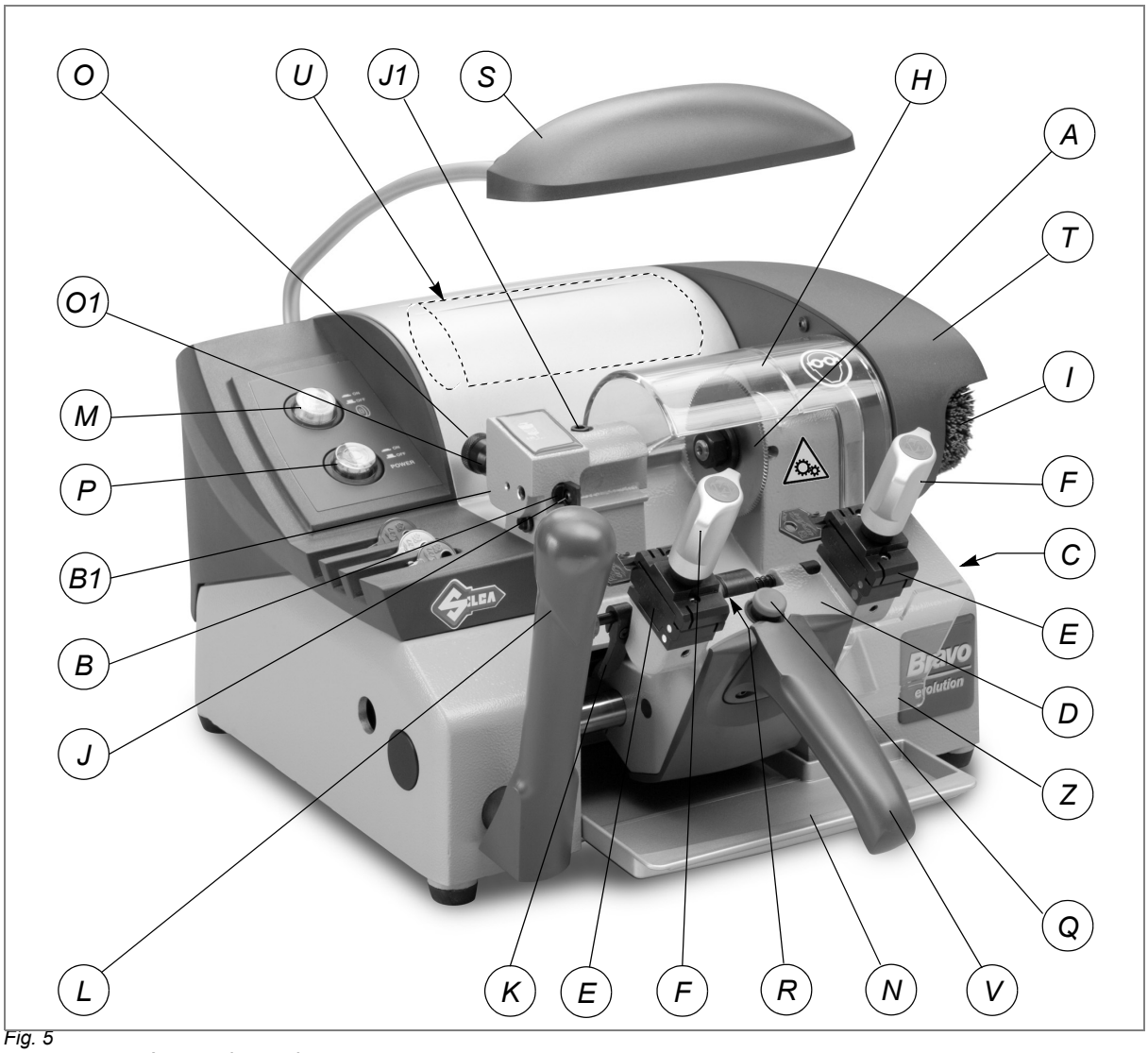

Fig. 5

A - cutting tool
B - tracer point
B1- tracer point support
C - master switch
D - carriage
E - clamp
F - clamp knob
H - transparent protective shield
I - brush
J - tracer point locking screw
J1- support/tracer point locking screw
K - calibration tabs
L - carriage movement lever
M - brush push button
N - chippings tray
O - tracer point regulating knob
O1- zero registration nut
P - motor start-up switch
Q - carriage release push button
R - calibration drum
S - neon lamp
T - belt housing
U - single speed motor
V - carriage handle
Z - protection from swarf produced by cutting



Copyright Silca 2021

3 MACHINE DESCRIPTION

The BRAVO is a professional cutting machine for flat keys used with cylinder locks for doors, cars and cruciform keys. The main parts of the machine are described below:

- **CONTROL PANEL**

The control panel with 2 controls is located on the left-hand side of the BRAVO key-cutting machine: the start-up switch for the motor (P) and the push button for the brush (M) (fig. 5, page 6).

- **MOTOR AND TRANSMISSION UNIT**

The motor (U) is located on the back of the BRAVO key-cutting machine, under the central cover.
Motor speed is that more suitable for the materials to be cut. The transmission unit is placed to the right of the motor.
By means of a belt under a protective cover (T), the transmission unit powers the movement of the brush (I) and cutting tool (A).

- **MOBILE UNIT**

The mobile unit (D), consisting of the clamps, is fitted to the horizontal movement carriage controlled by lever (L) and is provided with a handle (V) on the top of which can be found the carriage release button (Q).
The carriage movement, along a double shaft on bearing brasses, allows high precision movements which greatly facilitate all cutting operations.
The carriage is fully protected by the overhead cutting unit structure which avoids the accumulation of dust and chippings from the work process.

The BRAVO is completely safe when used properly. However, for greater safety, two safety devices are provided:

- an automatic braking mechanism for the carriage slide, activated in the key-locking position.
- an automatic carriage releasing device, linked to the return of the gauges to the idle position, which activates the cutting tool only when the carriage is released.

The key-cutting machine is designed with a sloping protected surface along which swarf is channelled into the special tray (N), easily removed for emptying and cleaning.

- **CUTTING UNIT**

The cutting unit contains the actual working parts of the BRAVO key-cutting machine, which operate together to cut and finish keys "read" from the originals. The working parts are described below:

Brush
The brush (I) is used to eliminate burrs from the cuts and is made of non-abrasive material.

Cutting Tool
The cutting tool (A) is the part of the BRAVO used for cutting key blanks from the tracer point's reading of the cuts on the original key. The cutting tool is in HSS super rapid steel or hard metal and is covered by a transparent plastic shield (H) which provides protection for the operator.

Tracer point
The tracer point (B) is placed on its own support (B1), to the left of the cutting tool. It has micrometric regulation which makes it possible to adjust the cutting depth quickly and accurately. The tracer point regulating knob (O) and the nut (O1) for registering zero are included in the unit. The original key-reading unit is complete with the tracer point locking screw (J) and the screw which holds it to the support (J1).

Clamps
The clamps vary according to the key-cutting machine version (Evolution, Professional and Sofer 2P) and all ensure perfect grip on keys placed flat or sideways (fig. 6, fig. 7 and fig. 8).
The clamps (E) are placed in front of the tracer point and cutting tool respectively to grip the original key and the key blank. With the clamps, cutting is rapid and precise for various types of keys and a wire range of optional accessories can be used on the machine.
Anatomical knobs (F) with which to secure the keys are fitted on top of the clamps. The knobs are designed so that only slight pressure is needed to give perfect grip on the keys.
On the lower side of the clamps are the calibration tabs (K). The rotating drum for the gauges (R) is placed at the centre of the carriage, between the two clamps.

Illumination of the work area
In order to facilitate safe use of the BRAVO key-cutting machine, it has a fixed neon lamp (S) that illuminates the work area and is switched on by means of the master switch (C).

Copyright Silca 2021

EVOLUTION version

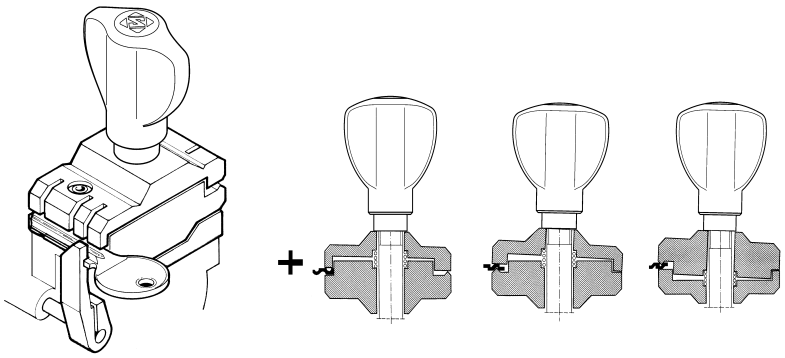

Fig. 6

PROFESSIONAL version

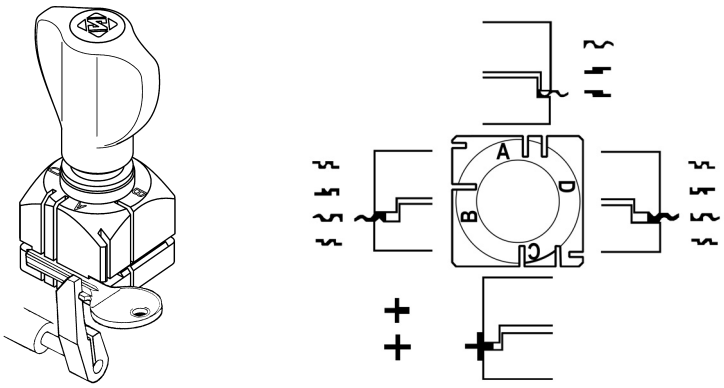

Fig. 7

SOFER 2P version

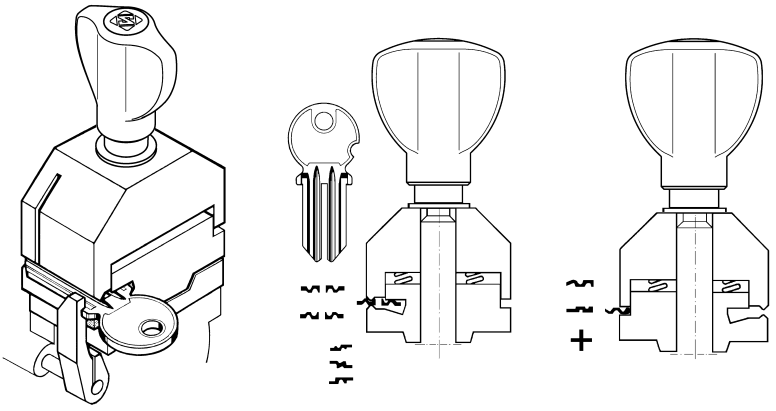

Fig. 8

Copyright Silca 2021

3.1 Safety

- **Cutter motor protection**

ATTENTION: **the cutter motor is protected from overheating by a device (inside the motor) that stops it when it reaches a dangerous temperature.**

This condition can occur when the machine motor is left on continuously, with high ambient temperatures or in severe working conditions. If the cutter motor overheats it cuts out automatically. In such cases proceed as follows:

a) turn off the master switch (C).
b) let the motor cool for at least 2 hours then use the machine normally.

- **Start-up**

The master switch (C) has a safety function that prevents untimely start-up when voltage returns after a cut-out.

3.2 Further Risks

ATTENTION: **there are residual hazards in the cutting zone (A) where the cutter is located. Carefully observe the warnings in the manual.**

- **To fit or remove keys from the clamp STOP THE MOVEMENT OF THE CUTTER by means of the switch (P). If this is not done the carriage may cause a hazard by going unexpectedly towards the moving cutter.**

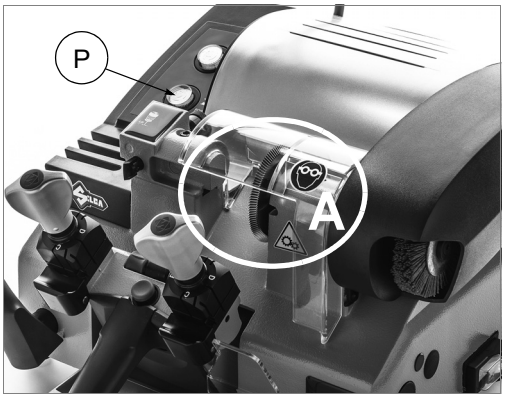

Fig. 9

3.3 Technical Data

ELECTRICAL PROPERTIES:	230V - 50/60Hz - 220W - 1,3A 100V - 50/60Hz - 400W - 4A 110V - 60Hz - 200W
MOTOR:	1 speed single phase 230V-50/60Hz / 100V-50/60Hz / 110V-60Hz (other voltages on request)
CUTTING TOOL:	Super Rapid Steel
MOVEMENTS:	on permanently lubricated bearings and sintered, self-cleaning, self-lubricating bushings
CLAMP:	high precision, with two, three or four sides (according to version)
SAFETY DEVICES:	motor start-up by means of carriage pick-up with gauges in the idle position
MAXIMUM LENGTH OF CUTS:	42 mm
ILLUMINATION:	neon lamp
DIMENSIONS:	width: 400 mm depth: 520 mm height: 400 mm
CUTTING NOISE:	Lp (A) = 79 dB (A) - brass keys
NOISE POTENTIAL:	Lw (A) = 90,5 dB (A) - steel keys
WEIGHT:	21,5 Kg.

Copyright Silca 2021

3.4 Electric circuit

The BRAVO key-cutting machine has a 1 speed single phase motor, 230V- 50/60Hz (100V - 50/60Hz) (110V - 60Hz).
The main parts of the electric circuit on the BRAVO are listed below:

1) Main plug with fuses
2) Safe main switch
3) Brush push button
4) Motor start up switch
5) Carriage microswitch
6) Cutter motor condenser
7) Lamp reactor
8) Terminal board
9) Neon lamp
10) Motor

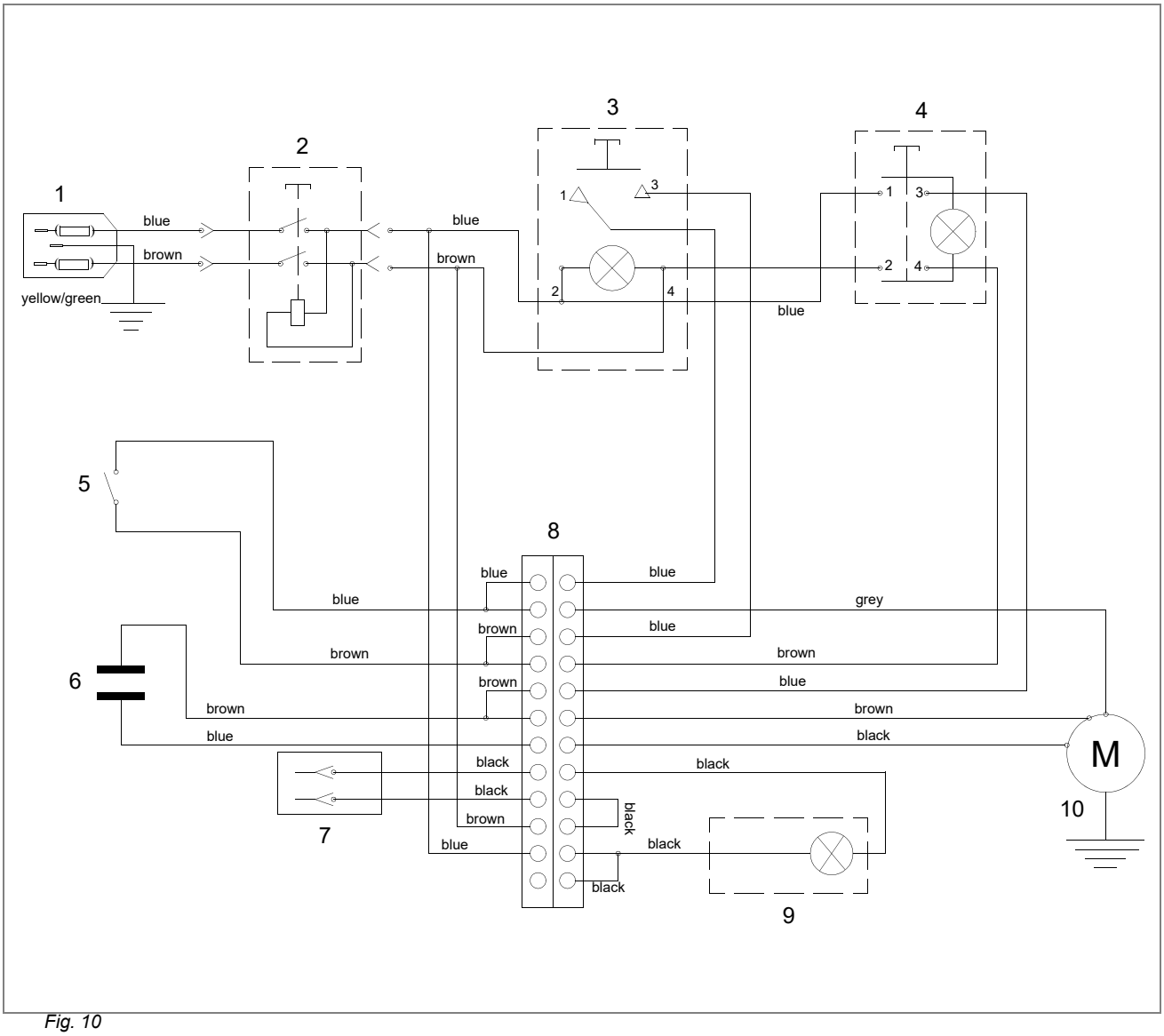

Fig. 10

 Copyright Silca 2021

4 ACCESSORIES PROVIDED

To ensure trouble-free working with the BRAVO, it is advisable to always have certain spare parts on hand. It is good policy to have a replacement CUTTER, BRUSH and BELT in the tool box.
BRAVO is supplied with a full range of accessories.
The accessories provided by Silca are all that is necessary to carry out the operations for which the machine is designed.

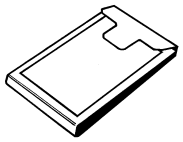	*POUCH* *1 pcs.*		*ALLEN WRENCH 5 mm* *1 pcs.*
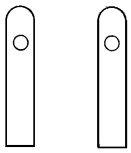	*STEEL BAR* *2 pcs.*		*ALLEN WRENCH 4 mm* *1 pcs.*
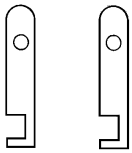	*STEEL BAR WITH NECK* *2 pcs.*		*ALLEN WRENCH 3 mm* *1 pcs.*
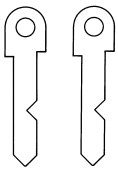	*ADJUSTING BAR* *2 pcs.*		*ALLEN WRENCH 2,5 mm* *1 pcs.*
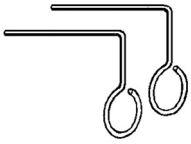	*STEEL PIN Ø 1.20 mm* *2 pcs.*		*ALLEN WRENCH 2 mm* *1 pcs.*
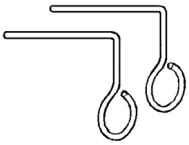	*STEEL PIN Ø 1.70 mm* *2 pcs.*		*FUSE (5 pcs.)* *4 AMPS RAPID for 230V* *8 AMPS RAPID for 100V* *6,3 AMPS RAPID for 110V*
	*10 mm SPANNER* *1 pcs.*	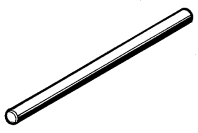	*CUTTER LOCKING PIN* *1 pcs.*
	*19 mm SPANNER* *1 pcs.*		

5 MACHINE INSTALLATION AND PREPARATION

The BRAVO key-cutting machine can be installed by the purchaser and does not require any special skills.
The machine is supplied ready for use and does not need to be set up. However, some checks and preparation for use need to be carried out by the operator.

5.1 Checking for damage

The BRAVO key-cutting machine is solid and compact and will not normally damage if transport, unpacking and installation have all been carried out according to the instructions in this manual.
However, it is always advisable to check that the machine has not suffered any damage.

5.2 Environmental conditions

To ensure that the best use is made of the BRAVO key-cutting machine, certain parameters must be borne in mind:

- damp, badly ventilated sites should be avoided.
- the ideal conditions for the machine are:

  temperature: between 10 and 40 °C
  relative humidity: approx. 60%

5.3 Positioning

Place the key-cutting machine on a horizontal surface, solid enough to take the weight.
To facilitate operation and maintenance, install the machine with a clearance of at least 200 mm on all sides (fig.11).
Ensure that the machine stands perfectly balanced on the four feet. Vibration is avoided when the machine is properly set on the horizontal plane.

ATTENTION: **ensure that the machine voltage is the same as that of the mains, which must be properly earthed and provided with a differential switch.**

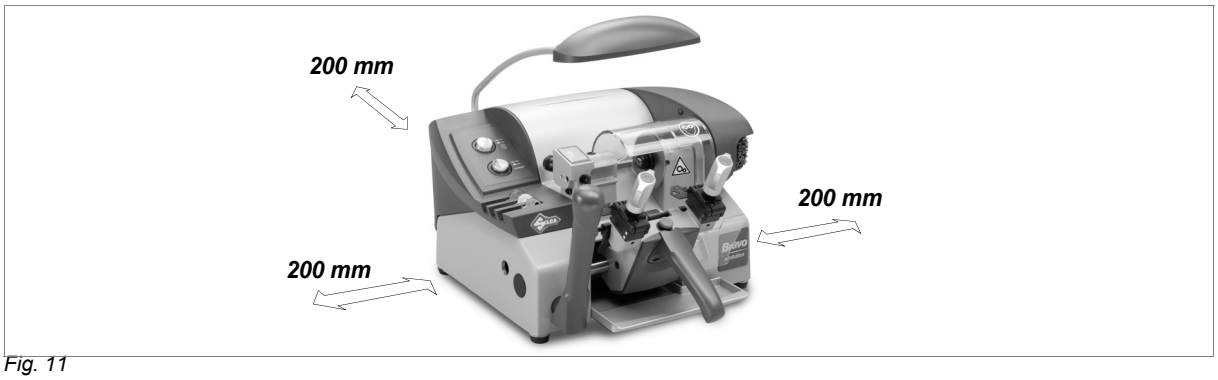

Fig. 11

5.4 Description of work station

The key-cutting machine needs only one operator, who has the following controls at his/her disposal:

- **master switch (C)**
- **motor start switch (P)**
- **push button (M) to activate the brush**
- **carriage movement lever (L), placed at the bottom left-hand side**
- **carriage handle (V)**

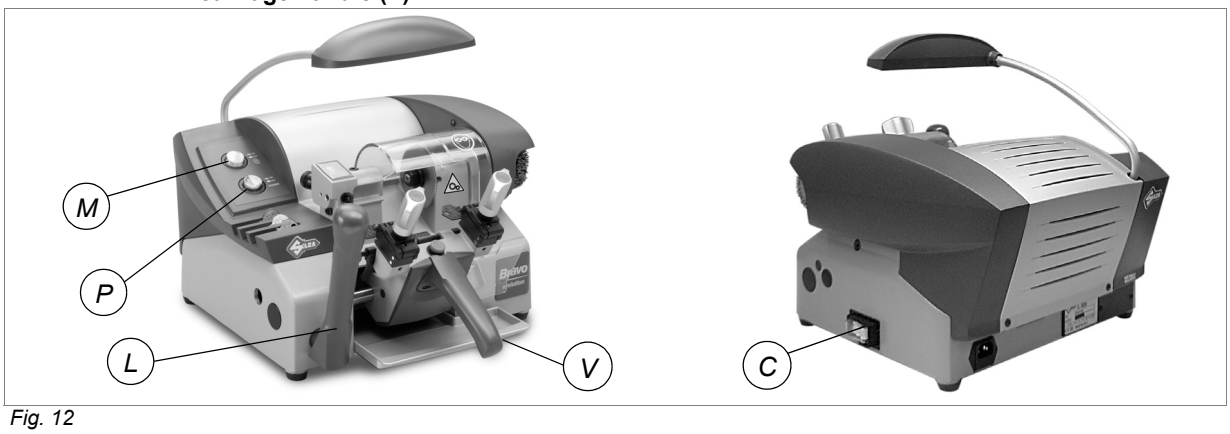

Fig. 12

 Copyright Silca 2021

5.5 Graphics



THE USE OF PROTECTIVE GOGGLES IS COMPULSORY

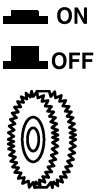

BRUSH PUSH BUTTON

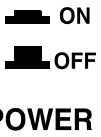

MOTOR START-UP SWITCH

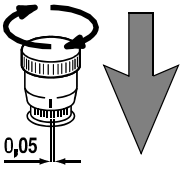

TRACER POINT WITH MICROMETRIC REGULATION

5.6 Separate parts

The separately packed parts must be installed on the BRAVO key-cutting machine by the purchaser, as follows:

Connection wire

Connect the supply wire to the inlet on the back of the machine.

5.7 Connection to the mains

For the safety of the operator and the machine it is important to ensure that the machine is connected to the proper mains voltage by means of an earthed differential switch.

Copyright Silca 2021

5.8 Checking and setting

The cutting tool on the BRAVO is the part used to cut the key blanks and should be periodically checked and replaced, if necessary.
Every time the cutting tool is changed, and during periodical operational tests, check calibration.

5.9 Calibration

Calibration should be carried out whenever parameters must be set on the machine.
BRAVO requires two types of calibration: **depth** and **axis**.

DEPTH CALIBRATION:

Depth calibration is regulation of the cutting depth (fig. 15, page 15). Proceed as follows:

1) Turn off the master switch (C) to operate safely and prevent activation of the cutting tool.
2) Place the adjusting key (provided) in the clamps (fig.13) with the notch facing the cutting tool and tracer point and proceed as follows:
    a) ensure that the keys adhere to the clamps and that the callipers (K) are in full contact with the stops.
    b) to take the callipers into contact with the keys, rotate the drum (R) towards you (away from you to return to the ideal position)

ATTENTION: the carriage will be released only if the callipers are in the ideal position.

3) Release the carriage by lowering the knob (V) and pressing the push button (Q) right down (fig. 17, page 15).
4) Raise the carriage and take up to the cutting tool.
5) Take the flat part of the key into contact with the cutting tool and tracer point (fig.14).
6) Turn the cutting tool by hand in the opposite direction to rotation and check that it skims the adjusting key at different points.
7) If necessary regulate the cutting tool depth with the micrometric tracer point, as follows:
    a) loosen the screw locking the tracer point (J2) (fig. 17, page 15).
    b) turn the knob (O) clockwise to move the tracer point forwards.
    c) turn the knob (O) anticlockwise to move the tracer point backwards (each mark on the graduated drum equals a variation of 0.05 mm).
8) If necessary, repeat the regulation operation a number of times. Tighten the screw (J2) before checking skimming (point 6).
9) Zero the tracer point by taking the reference index on the handwheel (O1) to the white mark on the graduated drum, as described below:
    a) with one hand hold still the knurled part of the knob (O).
    b) with the other hand turn the mobile part below it (O1).

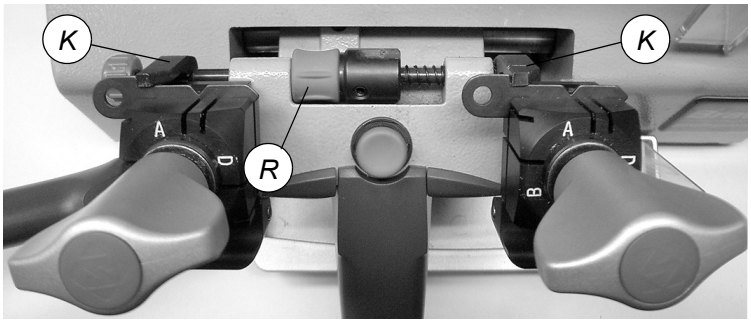

Fig. 13

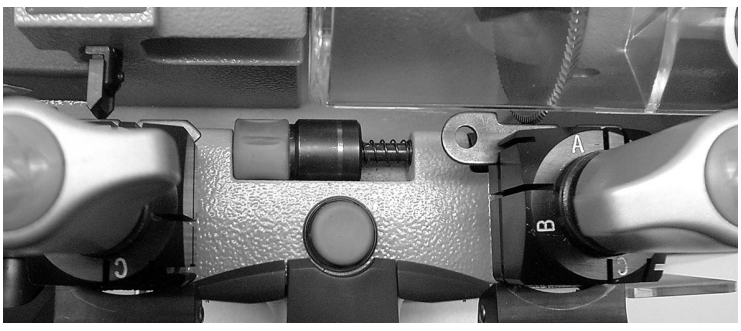

Fig. 14

Copyright Silca 2021

AXIS CALIBRATION:

Axis calibration is regulation of the cutting space on the key (fig.15). Proceed as follows:

1) Turn off the master switch (C) to operate safely and prevent activation of the cutting tool.
2) Place the adjusting key in the clamps (fig.17) with the notch facing the cutting tool and tracer point and proceed as follows:
   a) ensure that the keys adhere to the clamp and that the callipers (K) are in full contact with the stops.
   b) to take the callipers into contact with the keys, rotate the drum (R) towards you (away from you to return to the idle position).

ATTENTION: the carriage will be released only if the callipers are in the ideal position.

3) Release the carriage by lowering the knob (V) and pressing the push button (Q) right down (fig.17).
4) Move the adjusting key so that the notch comes into contact with the cutting tool (A) and tracer point (B).
5) Turn the cutting tool one full turn by hand in the opposite direction to rotation.
6) Check that the cutting tool skims the two sides of the notch.
7) If necessary, regulate the micrometric tracer point, as follows:
   a) loosen the screw (J1) to move the tracer point (fig.17).
   b) move the tracer point (B1) to the side by loosening or tightening the screw (B2).
   c) when skimming is satisfactory (point 5), tighten the screw (J1) all the way, without exerting pressure.
8) Lower the carriage by means of the handle (V) (it will engage automatically).
9) Remove the adjusting key.

ATTENTION: when adjusting keys have been repeatedly scratched by the cutting tool, they must be replaced. They can be replaced by two identical key blanks.

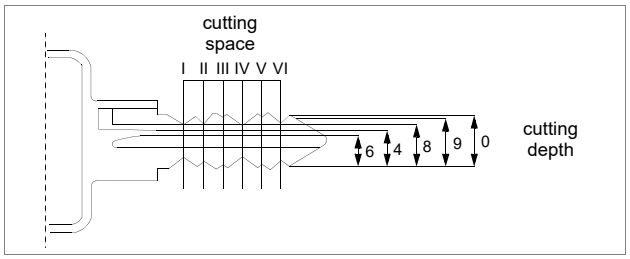

Fig. 15

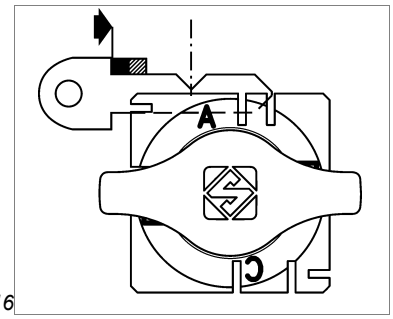

Fig. 16

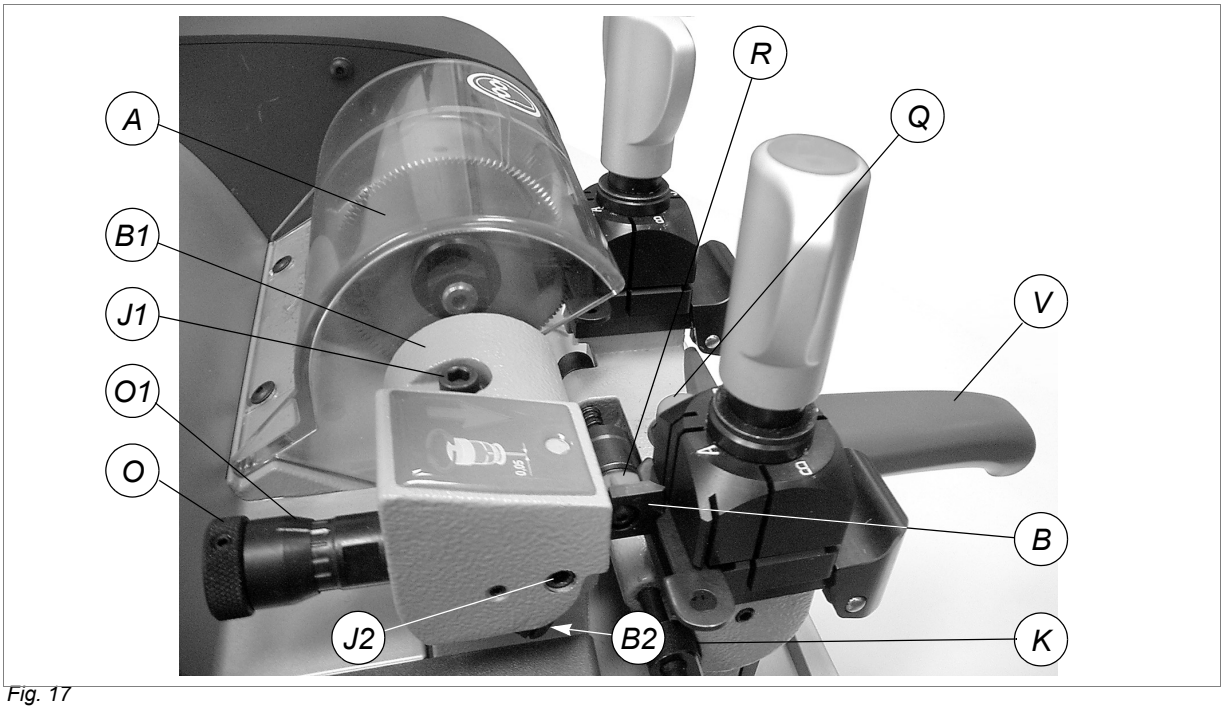

Fig. 17

6 CUTTING OPERATIONS

ATTENTION: for complete safety during the cutting operations, take the following precautions:

- **Always work with dry hands.**
- **Check that the machine is properly earthed.**
- **Wear protective goggles even if the machine has a protective shield over the cutting tool.**
- **Start the motor (switch P) only after completing the operations on the carriage (securing the keys, etc.).**
- **Keep hands away from the cutting tool in motion.**

6.1 Key cutting

When BRAVO has been turned on by means of push button (C), it is ready for cutting but the cutting tool is not rotating (because the carriage is held in the idle position). Now the original key and the blank can be placed in the jaws, ready for cutting.

SECURING THE KEYS IN THE JAWS

Position the key blank (right-hand jaw) and original (left-hand jaw), ensuring that:

a) the keys are resting properly on the bottom of the jaw.
b) the key stop butts against the gauge (K) or, in the absence of a stop, the tip of the key is against the stop bar (fig.18).
c) close the jaws by turning the knobs (F).

ATTENTION: the knobs are gauged so that they do not exert too much pressure for closing (if pressure is too high they only idle), which would damage the key and the parts of the clamp (including the knob).

To turn 2 or 3 sided clamps:

1) Unscrew the knobs (F) by a couple of turns.
2) Raise the lower part of the clamps above the aligning mark.
3) Turn the clamps to the required position.

To turn 4 sided clamps:

With loosened handle (F) a light rotation of the clamp is sufficient (gripping by the 2 jaws) to turn it to the required side. Alignment is automatic and guaranteed by the mobile pressure device (E1) (*) (fig.19).

ATTENTION:

- **for keys placed flat, such as those with cuts on one side only, position the clamps as shown in fig. 7, page 8 (side A of the clamps).**
- **for keys with cuts on both sides, turn the clamps as shown in fig. 7, page 8 (sides B and D of the clamps).**
- **for versions PROFESSIONAL, EVOLUTION and SOFER 2P see page 8.**

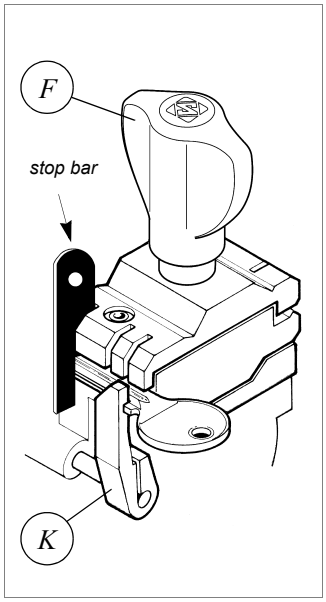

Fig. 18

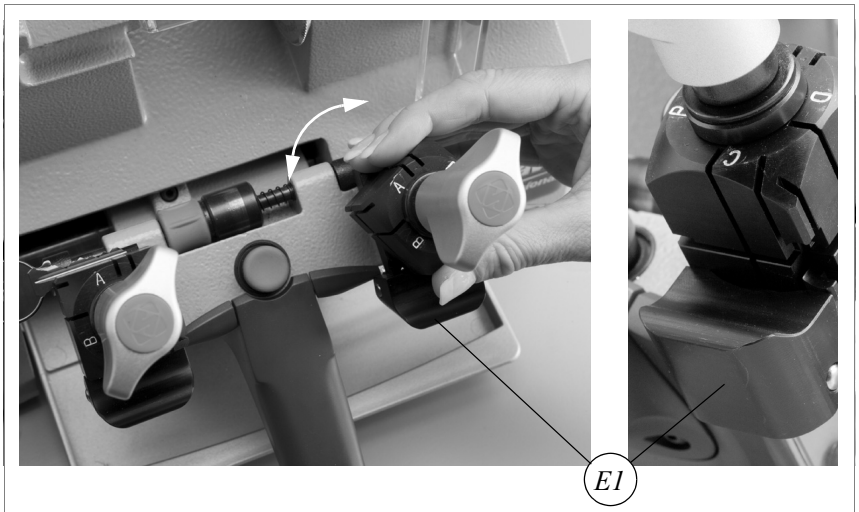

(*) For 4-sided clamps.
***Attention**: With loosened handle (F) a light rotation of the clamp is sufficient (gripping by the 2 jaws) to turn it to the required side. Alignment is automatic and guaranteed by the mobile pressure device (E1).*

Fig. 19

Copyright Silca 2021

USING THE PINS

For keys with narrow or thin stems one pin must be used (fig. 20-A, fig. 20-B).
For keys with narrow, thin stems, two pins must be used (fig. 20-C), the second one to give a secure grip on the key.

ATTENTION: the diameter of the pin used for the original key must be the same as that used for the key blank, so that the two keys are secured in identical positions in the jaws.

ATTENTION: never exchange the clamps.

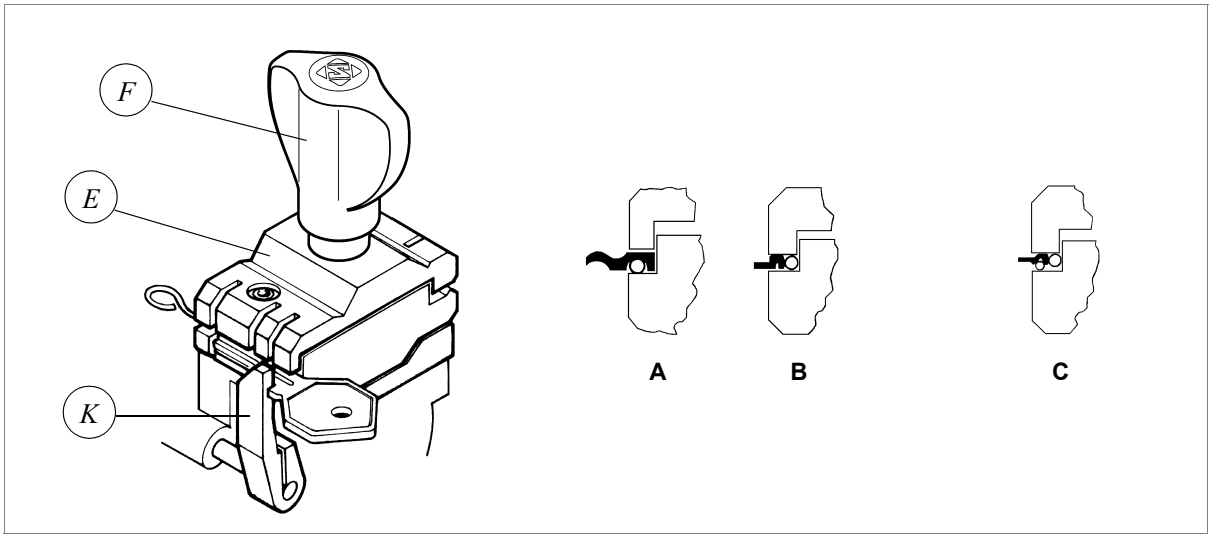

Fig. 20

6.2 Cutting cruciform keys (with 3 fins)

Ordinary or 4 sided clamps can be used to cut almost all cruciform keys (except Y and T shaped ones) (fig. 7, page 8).

Positioning cruciform keys:

1) Leave the gauges in the idle position.
2) Fit the original key into the left-hand clamp:
- insert the grooved bar into the notch on the clamp according to the key stop (as shown in fig.21, fig.22 and fig.23).
- butt the key stop up against the bar.
3) Tighten the knob (F) to secure the key.
4) Remove the bar.
5) Repeat the same procedure on the other clamp holding the key blank to be cut (pay attention to the corresponding fin).
6) Remove the bar.
7) Cut the first fin.
8) Turn the keys in the same direction to cut the other fins.

ATTENTION: the cuts on each fin are different.

POSITION OF KEY AND BAR

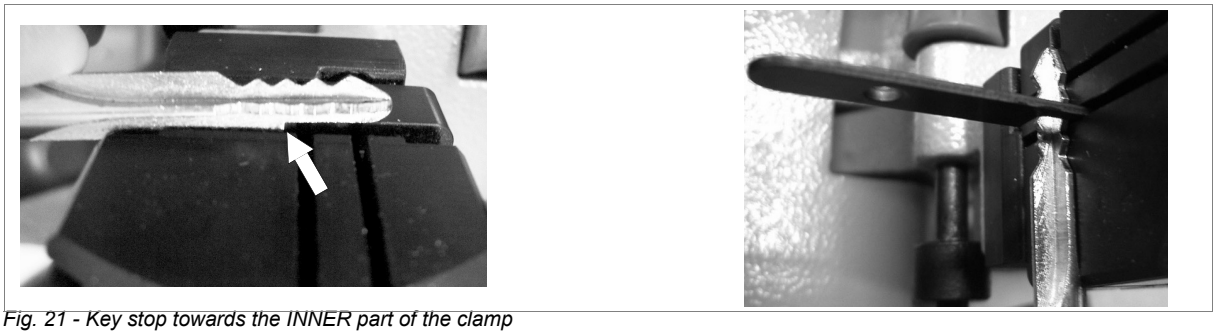

Fig. 21 - Key stop towards the INNER part of the clamp

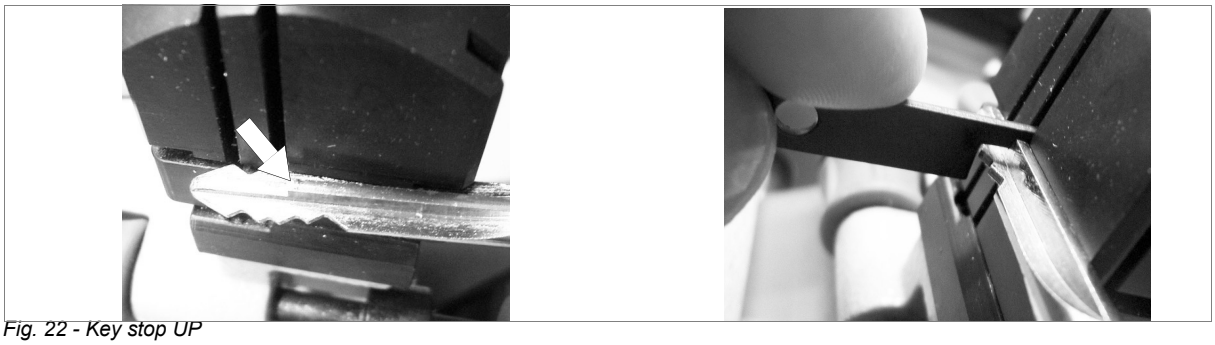

Fig. 22 - Key stop UP

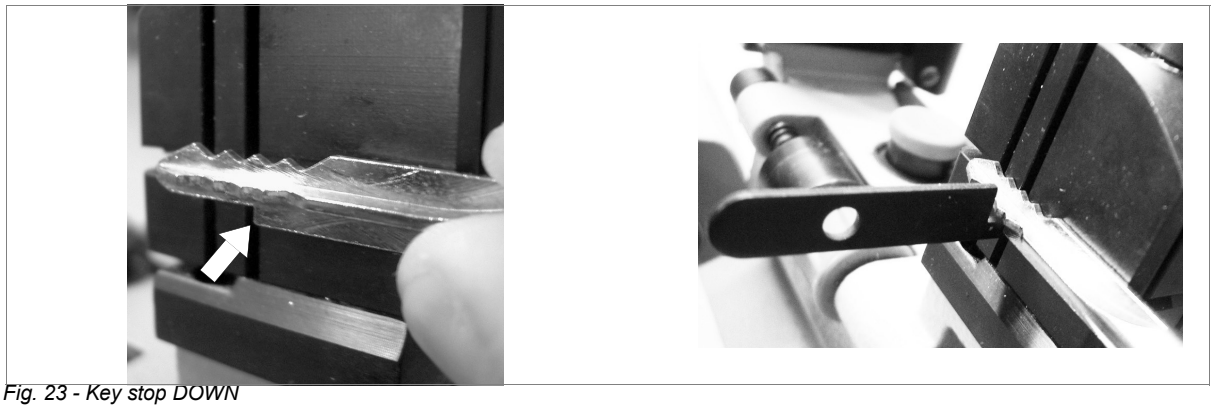

Fig. 23 - Key stop DOWN

Copyright Silca 2021

7 CLEANING AND MAINTENANCE

ATTENTION: for repairs or replacement of parts for maintenance, the 'CE' mark is guaranteed only if original spare parts provided by the manufacturer are used.

Although the BRAVO key-cutting machine does not require special maintenance, it is advisable to check and, if necessary, replace the parts subject to wear, such as: the belt, cutting tool, brush, tracer point. Replacement is simple and can be carried out by the operator.

CLEANING: keep the carriage and clamps free of chippings from the cutting operations by cleaning with a dry brush.

ATTENTION: DO NOT USE COMPRESSED AIR!

ATTENTION: to keep the machine well maintained we recommend using protective oil, e.g. WD40 or similar, applied to the burnished mechanical parts. This prevents oxidation of the parts in question (clamps, guides, carriages, etc.).

Before starting any type of maintenance (checks or replacements), read the instructions below:

- **never carry out maintenance or servicing with the machine switched on.**
- **always remove the mains plug.**
- **follow all the instructions in the manual to the letter.**
- **use original spare parts.**
- **always check that screws and nuts are properly tightened.**

7.1 Preparing for maintenance

Follow the procedure described below when carrying out maintenance or servicing the BRAVO:

- **turn off the master switch (C) (fig. 5, page 6).**
- **remove the mains plug.**
- **lock the carriage (D) if maintenance is to be carried out on any of its parts or on parts with which it comes into contact (cutting tool and tracer point).**

7.2 Replacing the cutting tool

To replace a worn cutting tool, proceed as follows:

1) **Turn the machine off and unplug it.**
2) Remove the cutter locking screw (H1) and remove the cutter protective shield (H) (fig.24).
3) Place the locking pin into the groove in the base and the special hole in the cutting tool shaft (fig.25).
4) With the spanner provided loosen the cutting tool locking nut.

ATTENTION: the thread is left-handed.

5) Carefully clean the new cutting tool and all the parts which come into contact with it.
6) Replace the cutting tool and tighten the nut.

ATTENTION: the tool rotates clockwise.

7) Remove the locking pin and fix the shield (H) with screw (H1).

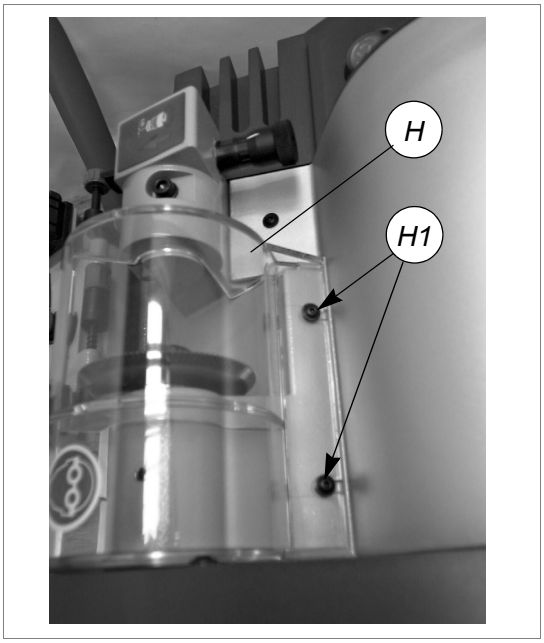

Fig. 24

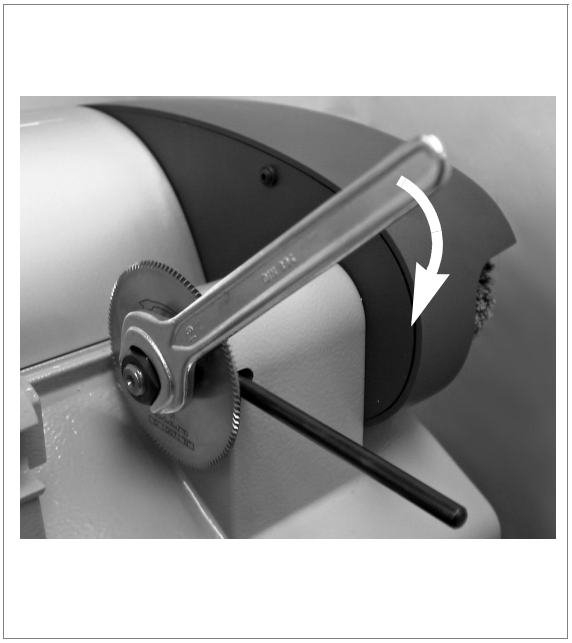

Fig. 25

7.3 Replacing the brush

When the brush no longer cleans off the burrs it must be replaced as follows:

1) Turn the machine off and unplug it.

2) Place the locking pin into the groove in the base and into the special hole in the cutter shaft (fig.26).

3) Use the Allen wrench to loosen the screw holding the brush in place.

4) Replace the brush and tighten the screw with the Allen wrench.

5) Remove the locking pin.

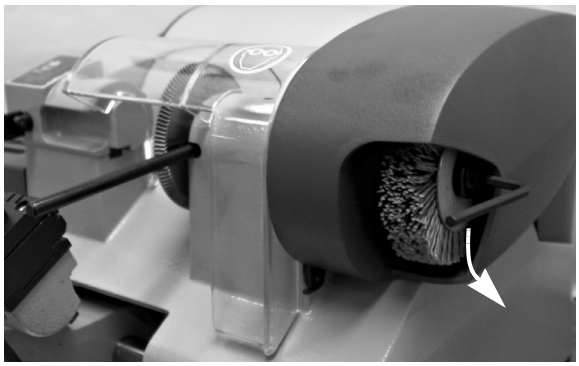

Fig. 26

7.4 Replacing the tracer point

To replace the tracer point, proceed as follows:

1) Turn the machine off and unplug it.

2) Loosen and remove the screw (J) and remove the tracer point (B) (fig.27).

3) Place the new tracer point in position and fix with the screw (J).

4) Re-calibrate the machine, following the procedure described in chap. 5.9 on page 14.

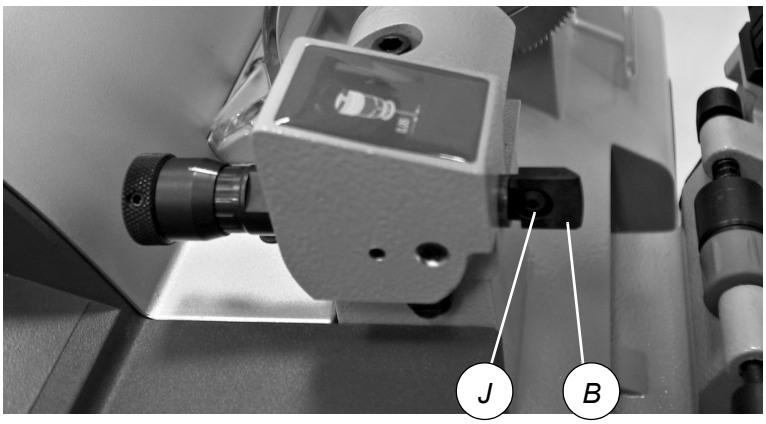

Fig. 27

7.5 Replacing the swarf protection

ATTENTION: **DANGER OF MECHANICAL FINGERS CRUSHING IN THE CASE OF A BROKEN PROTECTION (Z).**

1) Turn the machine off and unplug it.

2) Loosen the two screws (V1) and remove the swarf protection (Z) (fig.28).

3) Install the new protection and secure it with the screws (V1).

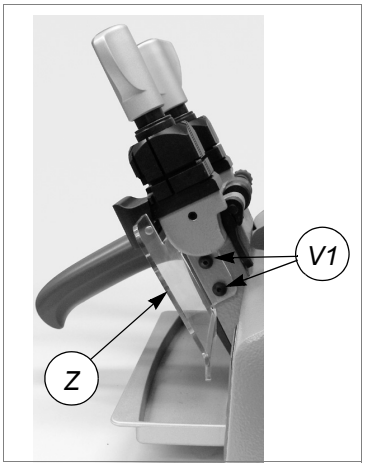

Fig. 28

Copyright Silca 2021

7.6 Regulating of maximum carriage depth

To prevent damage to the clamps and cutting tool, maximum cutting depth must be established.

ATTENTION: **the distance between the cutting tool/tracer point and clamp must be 0.1 mm. If this is not the case, proceed as follows:**

1) **Turn the machine off and unplug it.**
2) Release the carriage and raise (against the cutting tool) at the end of run (fig.29).
3) Remove the chippings tray.
4) Use the 10 mm spanner to release the nut.
5) Use the 3 mm Allen wrench to regulate the grub screw, through the hole on the bottom of the machine.
6) Tighten the nut.

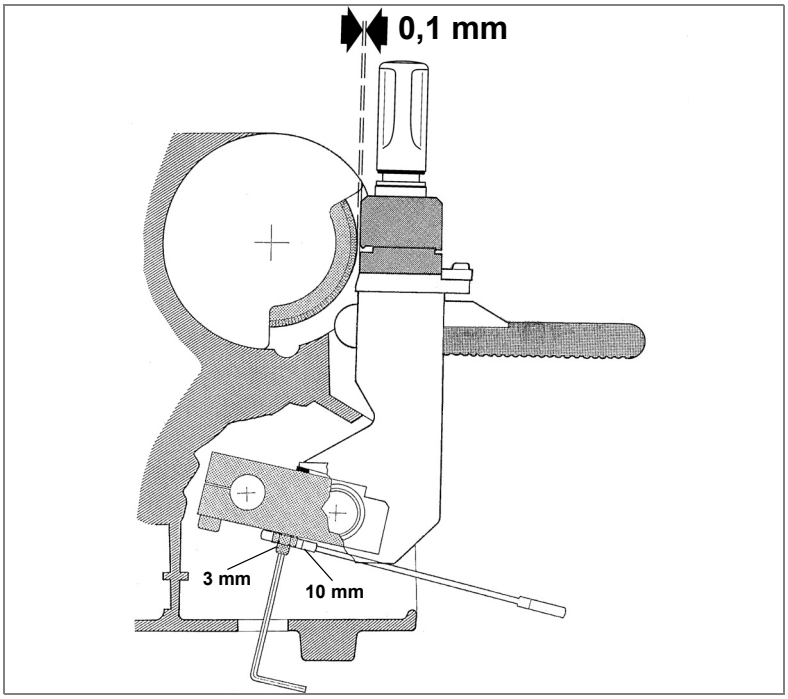

Fig. 29

7.7 Replacing the fuses

ATTENTION: **fuses must always be replaced with others of the same type (rapid) and with the same Amps (4 Amps for the 230V machine, 8 Amps for the 100V machine, 6,3 Amps for the 110V machine).**

1) **Turn the machine off and unplug it.**
2) Turn the key-cutting machine so that the fuse box is easily reached.
3) Remove the fuses box placed below the key-cutting machine socket (fig.30).
4) Replace the fuses (U).
5) Close the fuses box and connect the power cable.

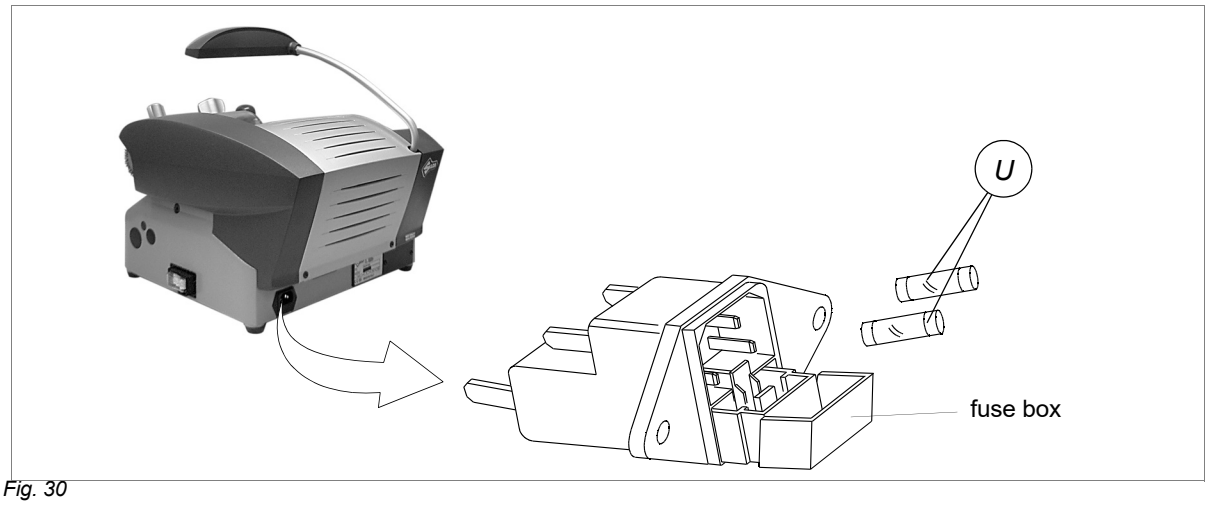

Fig. 30

Copyright Silca 2021

7.8 Access to bottom compartment

1) **Turn the machine off and unplug it.**
2) Remove the swarf tray.
3) Turn the machine onto its left-hand side.
4) Loosen the 7 screws (W) and 2 feet (W1) and remove the bottom safety plate (W2) (fig.31).

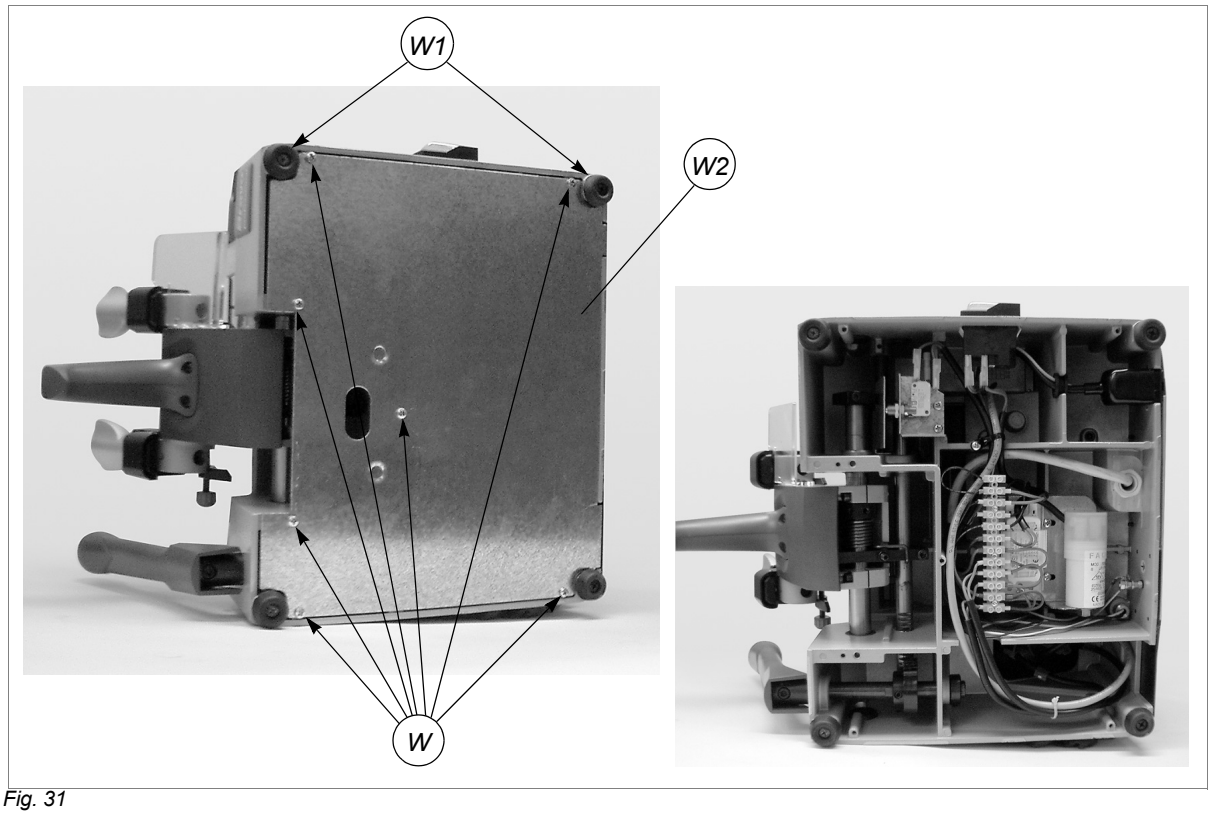

Fig. 31

7.9 Replacing the master switch

1) **Turn the machine off and unplug it.**
2) Remove the bottom panel (see ch. 7.8).
3) Detach the various connectors (1, 2, 3, 4) paying careful attention to their positions (fig.32).
4) Press on the 2 tabs (W4) on the switch and pull it out.
5) Fit the new switch properly, taking care to secure it well (tabs).
6) Reconnect the various connectors (1, 2, 3, 4).
7) Replace the bottom safety plate and fix with the 7 screws (W) and 2 feet. Fit the swarf tray.

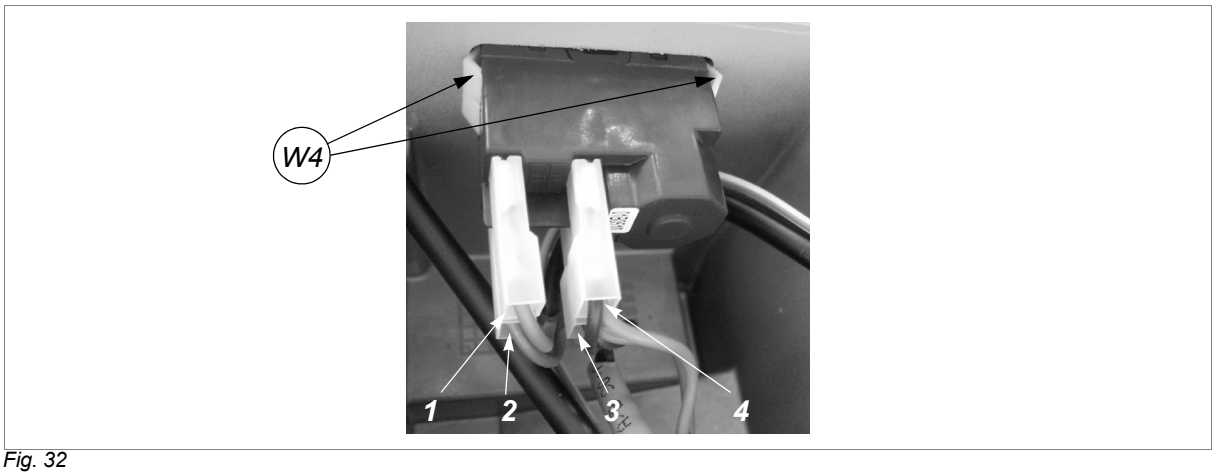

Fig. 32

Copyright Silca 2021

7.10 Replacing the condenser (motor) and/or feeder (lamp)

1) Remove the bottom panel (see ch. 7.8).

CONDENSER

1) Loosen the nut (Z) and remove the washer (Z1) and condenser (fig.33).
2) Fit the new condenser and fix with the washer (Z1) and nut (Z).
3) Remove the cap (Z2) from the new condenser.
4) Remove the cap from the old condenser and detach the connectors (1 and 2) from the old condenser to connect them to the new one, paying attention to their positions.
5) Replace the cap (Z2) on the new condenser.
6) Replace the bottom safety plate, fix with the 7 screws (W) and 2 feet (fig. 31, page 22). Fit the swarf tray.

LAMP REACTOR

1) Loosen the 2 screws (Y) and remove the reactor (fig.34).
2) Use the tip of a small screwdriver to enter the slits (Y1) and detach the 2 wires (Y2), (Y3).
3) Fit the 2 wires (Y2), (Y3) into the special connections on the new reactor.
4) Place the new reactor in its seat and secure with the 2 screws (Y).
5) Replace the bottom safety plate and fix with the 7 screws (W) and 2 feet (W1) (fig. 31, page 22). Fit the swarf tray.

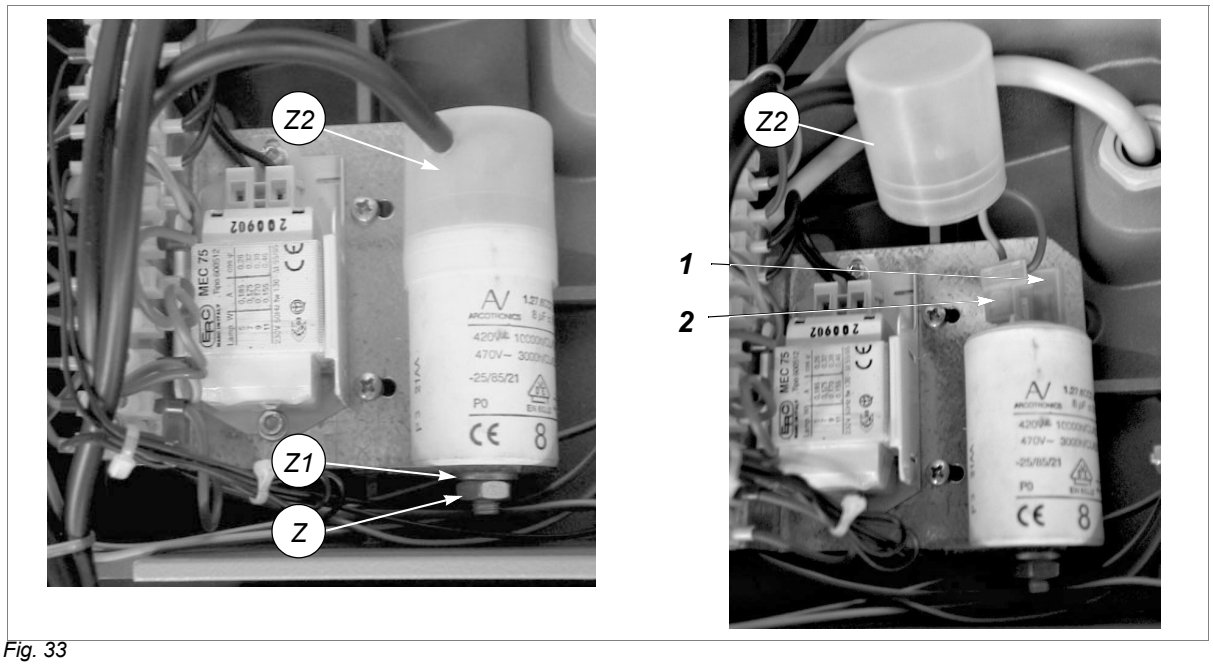

Fig. 33

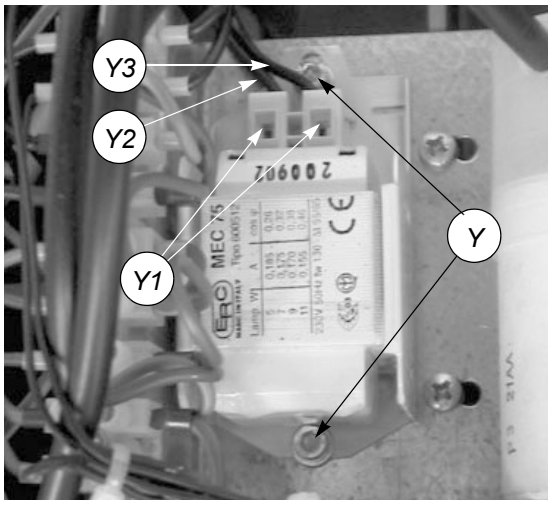

Fig. 34

7.11 Replacing the microswitch

1) **Turn the machine off and unplug it.**
2) Release the carriage and leave it in the working position (towards the tracer point).
3) Remove the bottom panel (ch.7.8, page 22).
4) Loosen the nut (Q1) and remove the microswitch (fig.35).
5) Detach the connectors (1, 2 and 3) paying attention to their positions.
6) Fit the new microswitch into the seat of the previous one, and secure with the nut (Q1).
7) Connect the connectors (1, 2 and 3).
8) Raise and lower the carriage to check that the microswitch works properly (click).
9) Replace the bottom safety plate and secure with the 7 screws (W) and 2 feet (W1) (fig. 31, page 22). Fit the swarf tray.

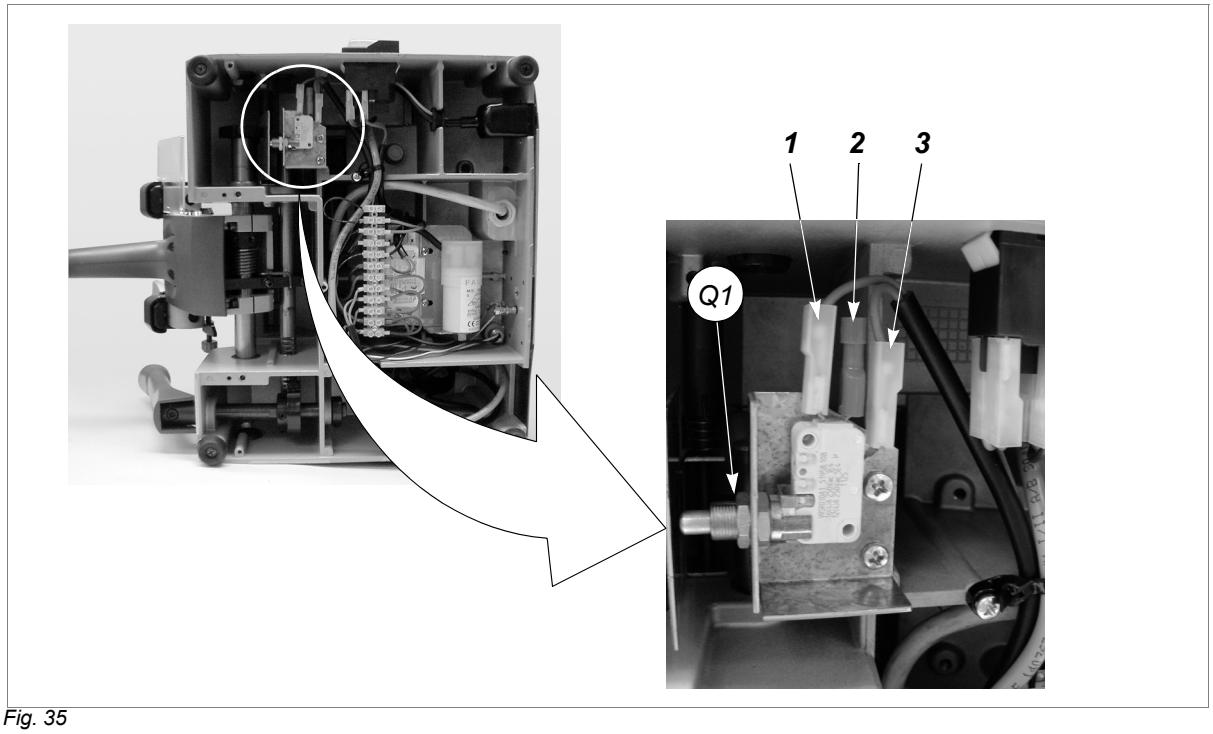

Fig. 35

Copyright Silca 2021

7.12 Replacing the switch and/or push button

1) Turn the machine off and unplug it.
2) Loosen the 2 screws (H1) on the cutter cover (H) and remove (fig.36).
3) Loosen the 3 screws (T1) on the central cover, raise slightly and remove, tipping a little.
4) Loosen the 3 screws (T2) (fig.37) on the belt cover and remove (pull out towards the front of the machine).
5) Remove the belt (ch.7.13, page 26).
6) Loosen the nuts (U1) on the stay bolts (U2) and remove together with their washers (fig.37).
7) Loosen the stay bolts (U2) (fig.38) and remove.
8) Loosen the screw (U3) on the left-hand cover (fig.38).
9) Raise the left-hand cover to gain access to the switches.
10) Remove the connectors (1, 2, 3, 4), paying attention to their positions (fig. 39, page 26).
11) Press the tabs (W4) in order to remove the switch/es.
12) Fit the new switch and/or push button, taking care that it is well secured (tabs).
13) Reconnect the various connectors (1, 2, 3, 4).
14) Replace the left-hand cover and tighten the screw (U3)
15) Fit the stay bolts (U2), screw onto the left-hand cover and secure with the washer and nut (U1).
16) Replace the belt cover and tighten the 3 screws (T2).
17) Replace the central cover and tighten the 3 screws (T1)
18) Replace the cutter cover and tighten the 2 screws (H1).

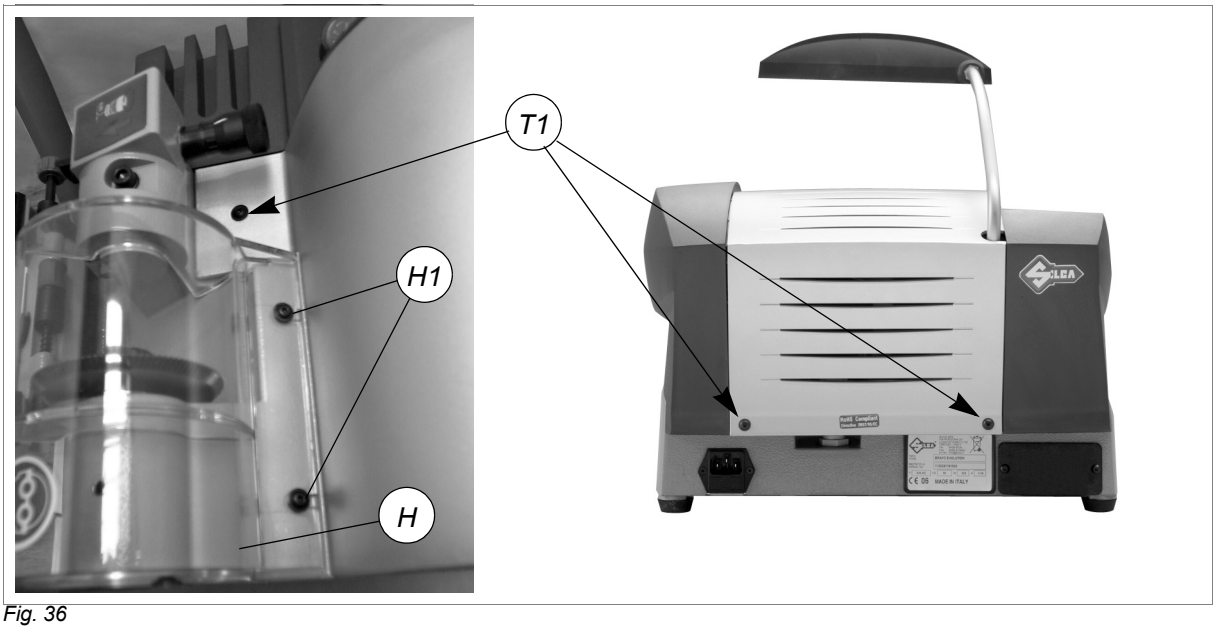

Fig. 36

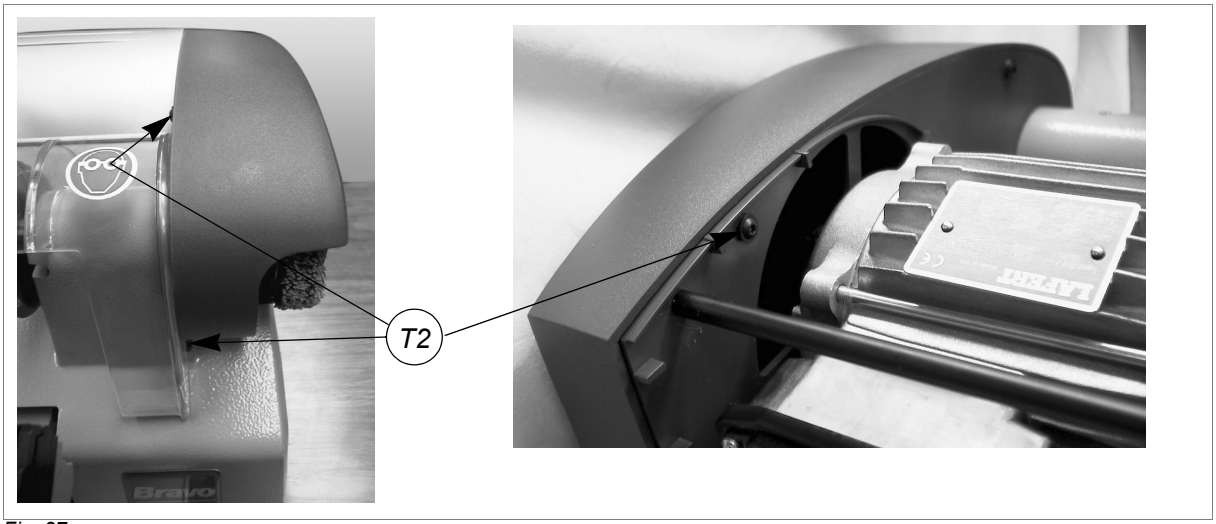

Fig. 37

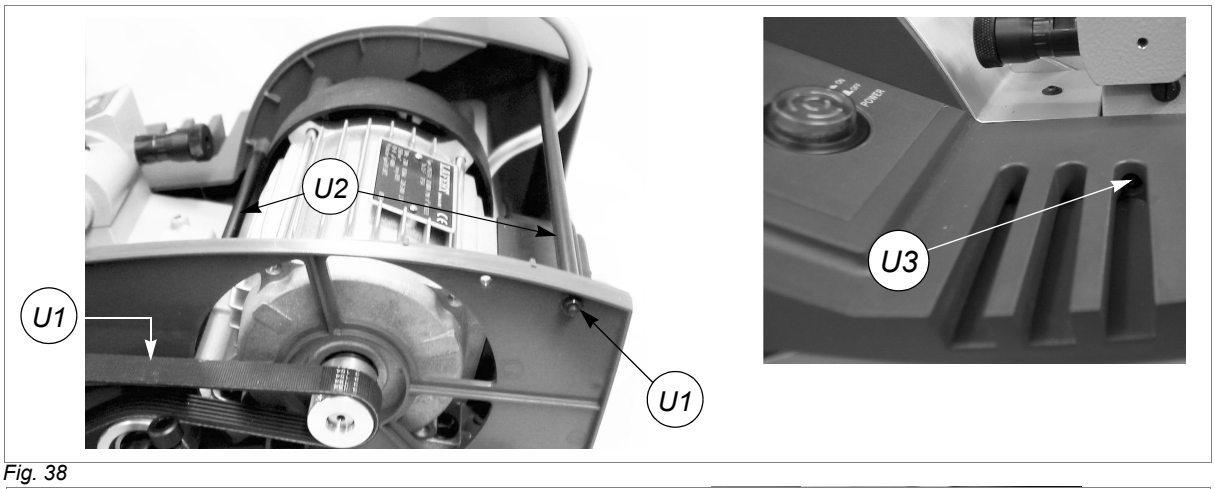

Fig. 38

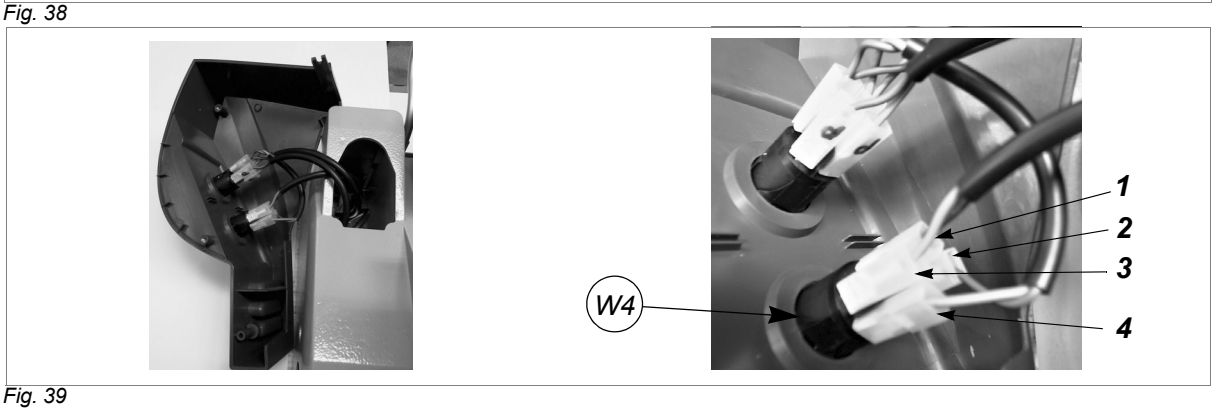

Fig. 39

7.13 Replacing and/or tightening the belt

1) Turn the machine off and unplug it.

2) Loosen the 2 screws (H1) on the cutter cover (H) and remove (fig. 36, page 25).

3) Loosen the 3 screws (T1) on the central cover (fig.36), raise slightly and remove, tipping a little.

4) Loosen the 3 screws (T2) (fig. 37, page 25) on the belt cover and remove (pull towards the front of the machine).

TIGHTENING:

- screw the screw/nut (U4) until the belt is properly tightened (fig.40).

REPLACEMENT:

- loosen the screw/nut (U4) to lower the belt tightening pulley.
- remove the existing belt, turn the bigger pulley manually, exerting a little pressure on the belt (on the motor pulley) and take out of its seat.
- fit the new belt, placing it in the motor pulley then (forcing a little) in the bigger pulley, turning it manually.

5) Tighten the screw/nut (U4) until the belt is properly tightened.

6) Replace the belt cover and fix with the 3 screws (T2) (fig. 37, page 25).

7) Replace the central cover and fix with the 3 screws (T1) (fig. 36, page 25).

8) Replace the cutter cover and fix with the 2 screws (H1).

(*) Should the tightening be difficult to do, loosen the 4 fixing screws and move the motor until it is properly placed. Tighten the 4 fixing screws.

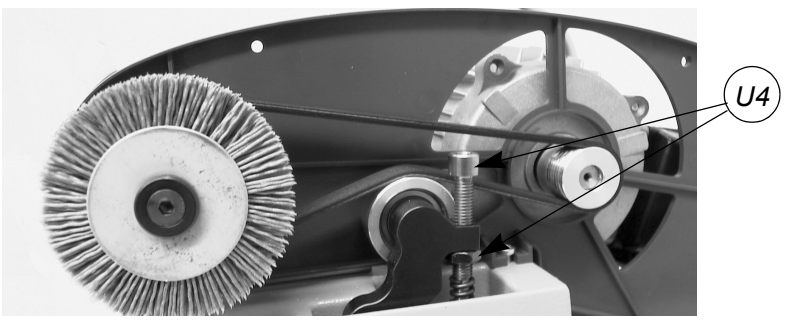

Fig. 40

Copyright Silca 2021

7.14 Replacing the single speed motor

1) Turn the machine off and unplug it.

2) Remove the bottom panel (see ch. 7.8).

3) Disconnect the 4 motor wires (1, 2, 3, 4) from their connections (fig.41).

4) Place the machine in its upright position again.

5) Loosen the 2 screws (H1) on the cutter cover (H) and remove (fig. 36, page 25).

6) Loosen the 3 screws (T1) on the central cover, raise slightly and remove, tipping a little (fig. 36, page 25).

7) Loosen the 3 screws (T2) (fig. 37, page 25) on the belt cover and remove (pull towards the front of the machine).

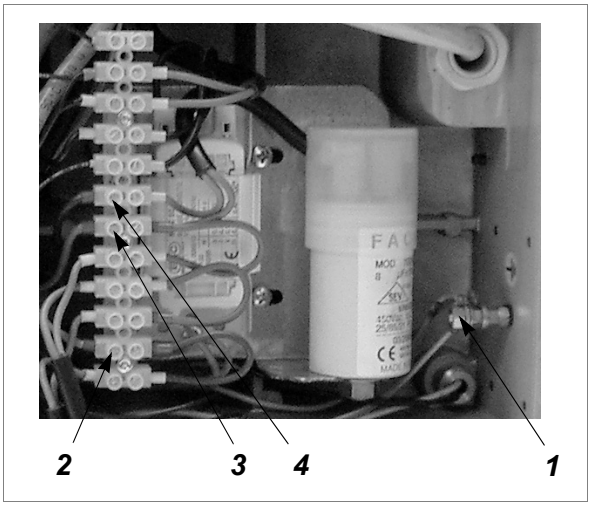

Fig. 41

8) Loosen the fairlead (U5) (fig.42).

9) Loosen the grub screw/nut (U4) in order to lower the belt tightening pulley and pull the belt off the motor pulley.

10) Loosen the 4 fixing screws on the motor (fig.43) and remove, paying attention to the wire.

11) Loosen the grub screw (U6) on the motor pulley (fig.43). Remove the pulley and fit to the new motor. Secure by tightening the grub screw (U6).

12) Fit the new motor into its housing, taking care to put the wires through first, then secure with the 4 screws (U7).

13) Tighten the fairlead (U5).

14) Fit the belt, first in the motor pulley then (forcing a little) in the bigger pulley, turning manually.

15) Tighten the grub screw/nut (U4) until the belt is properly tightened (fig. 40, page 26).

16) Replace the belt cover and fix with the 3 screws (T2) (fig. 37, page 25).

17) Replace the central cover and fix with the 3 screws (T1) (fig. 36, page 25).

18) Replace the cutter cover and fix with the 2 screws (H1) (fig.36).

19) Turn the machine onto its left-hand side.

20) Connect the 4 motor wires (1, 2, 3, 4) (fig.41).

21) Replace the bottom safety plate and fix with the 7 screws (W) and 2 feet (fig. 31, page 22). Fit the swarf tray.

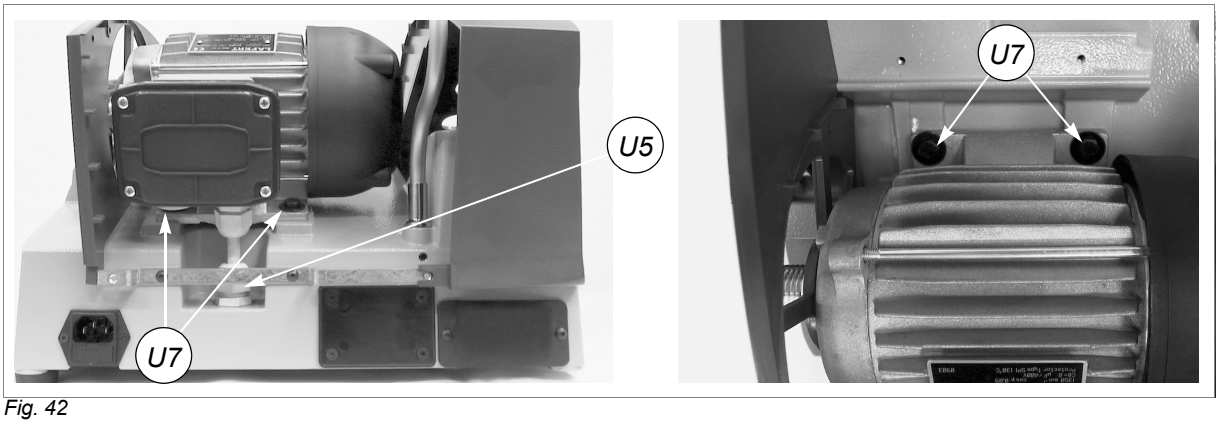

Fig. 42

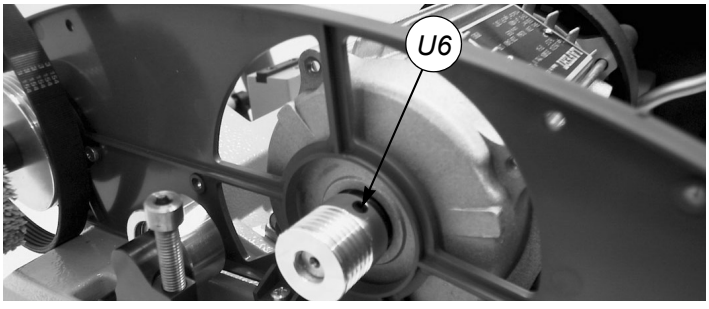

Fig. 43

7.15 Replacing the light bulb

1) **Turn the machine off and unplug it.**
2) Loosen the 5 screws (S1) on the lamp shield and remove.
3) Remove the bulb (S) taking care not to use pointed utensils for this operation.
4) Fit the new bulb.
5) Replace the lamp shield and tighten the 6 screws (S1) to secure.

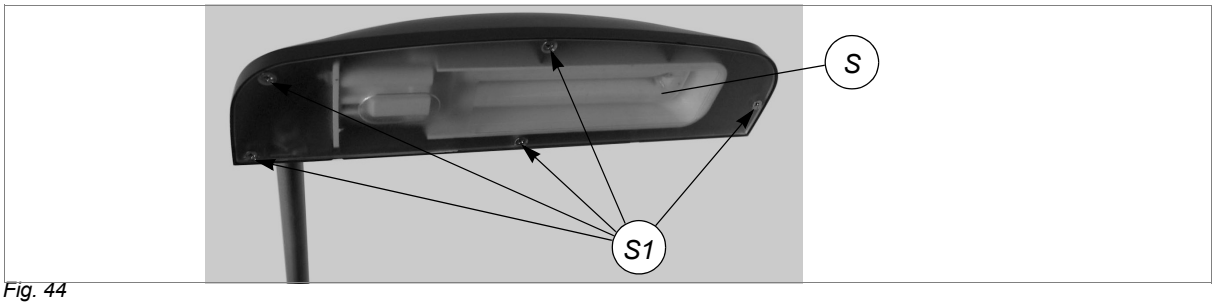

Fig. 44

7.16 Replacing carriage spring

1) **Turn the machine off and unplug it.**
2) Loosen the 2 screws (V1) and remove the protection from swarf (Z) (fig.45).
3) Release the carriage and leave it in the working position (towards the tracer point).
4) Loosen the 2 screws (V2) on the carriage knob (V) (fig.45).
5) To remove the knob (V), raise a little and pull off.
6) Remove the plastic safety shield (D1) on the carriage.
7) Loosen the 2 screws (D2) on the carriage.
8) Remove the caps (D3) from the base (fig. 47, page 29).
9) Remove the swarf tray (N).
10) Turn the machine onto its back.
11) Loosen the 7 screws (W) and 2 feet (W1) and remove the bottom panel (W2) (ch.7.8, page 22).
12) Loosen the screw (N1) on the cam (N2) (fig. 48, page 29) and pull the cam to the right to remove.
13) Loosen the grub screw (Q1) on the spring ring nut (Q2) (fig. 49, page 29).
14) Push the carriage rod from right to left so that the spring can be removed.
15) Fit the new spring into its seat and push the carriage rod from left to right. Tighten the 2 screws (D2).
16) Use a pivot to turn the ring nut (Q2), adjust spring tension and tighten the grub screw (Q1).
17) Take the carriage to the locked position (towards the operator).
18) Replace the cam (N2) so that it pushes the plate (N3) hard up against the microswitch; tighten the screw (N1) (fig. 48, page 29).
19) Replace the bottom panel and fix with the 7 screws (W) and 2 feet. Fit the swarf tray.
20) Place the machine upright again (working position).
21) Fit the caps (D3).
22) Replace the carriage safety shield (D1) and fit the knob (V), pressing it downwards.
23) Tighten the 2 screws (V2).
24) Replace the protection from swarf (Z) and tighten the 2 scews (V1).

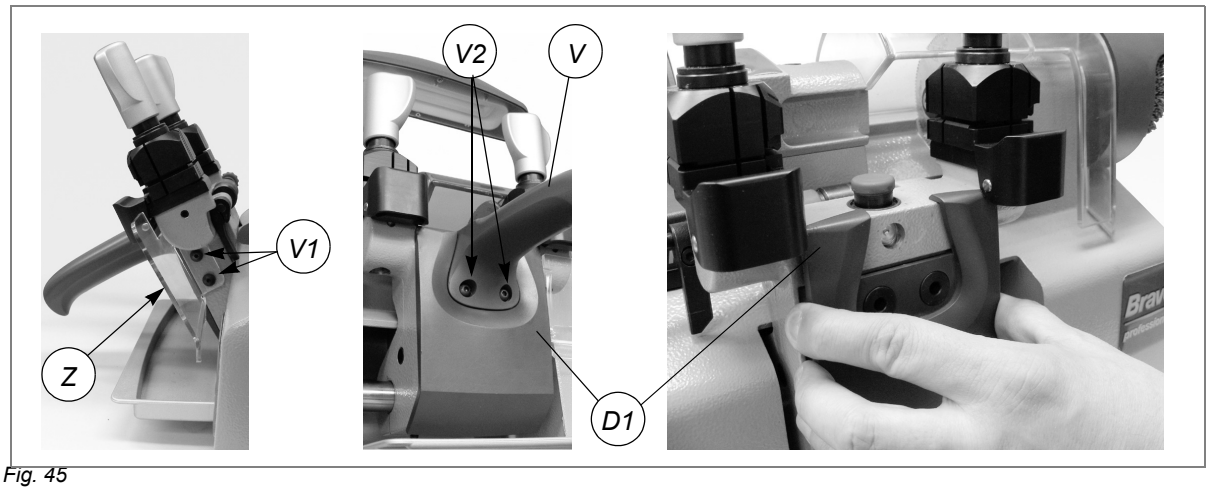

Fig. 45

Copyright Silca 2021

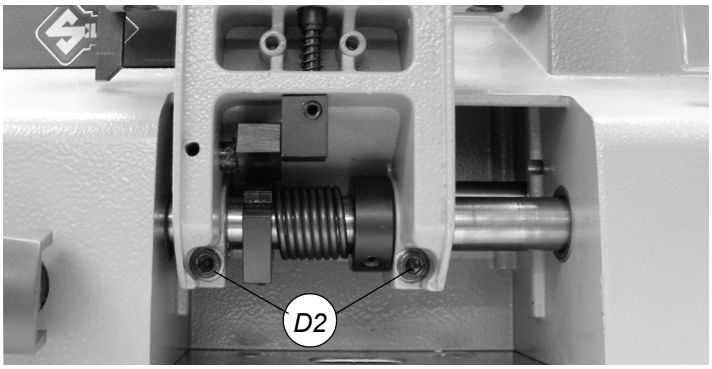

Fig. 46

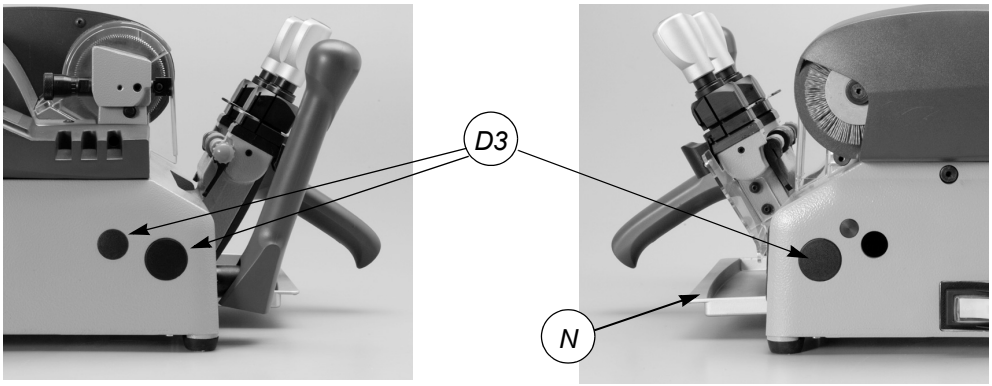

Fig. 47

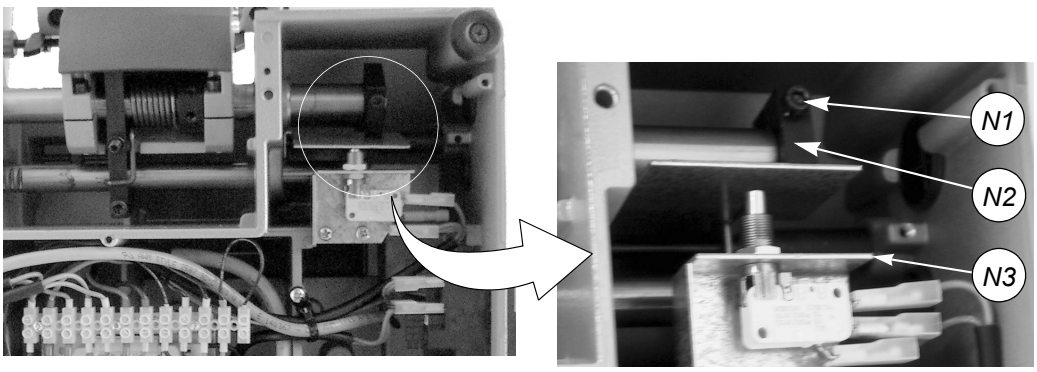

Fig. 48

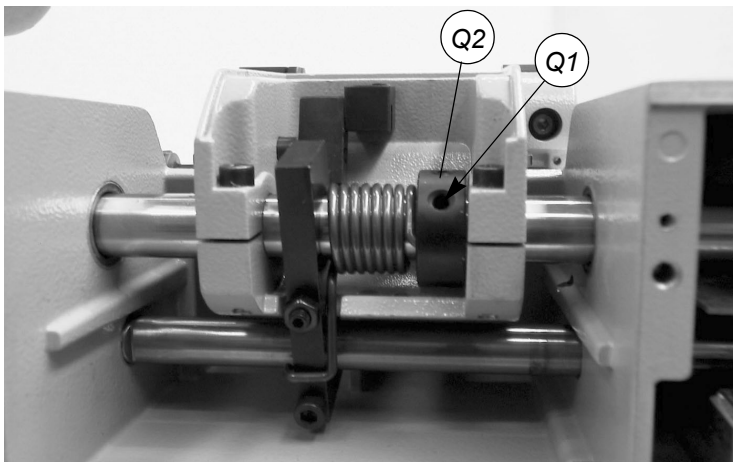

Fig. 49

8 DISPOSAL

For correct disposal please refer to current standards.

INFORMATION FOR USERS OF PROFESSIONAL EQUIPMENT

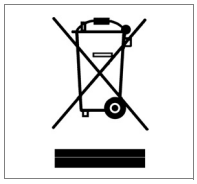

From "Actuation of Directive 2012/19/EU regarding Waste Electrical and Electronic Equipment (WEEE)"

The symbol of a crossed waste bin found on equipment or its packing indicates that at the end of the product's useful life it must be collected separately from other waste so that it can be properly treated and recycled.
In particular, separate collection of this professional equipment when no longer in use is organised and managed:

a) directly by the user when the equipment was placed on the market before 31 December 2010 and the user personally decides to eliminate it without replacing it with new equivalent equipment designed for the same use;

b) by the manufacturer, that is to say the subject which was the first to introduce and market new equipment that replaces previous equipment, when the user decides to eliminate equipment placed on the market before 31 December 2010 at the end of its useful life and replace it with an equivalent product designed for the same use. In this latter case the user may ask the manufacturer to collect the existing equipment;

c) by the manufacturer, that is to say the subject which was the first to introduce and market new equipment that replaces previous equipment, if it was placed on the market after 31 December 2010;

Suitable separate collection for the purpose of forwarding discarded equipment for recycling, treatment or disposal in an environmentally friendly way helps to avoid possible negative effects on the environment and human health and encourages re-use and/or recycling of the materials making up the equipment.

The sanctions currently provided for by law shall apply to users who dispose of products in unauthorised ways.

Copyright Silca 2021

9 ASSISTANCE

Silca provides full assistance to purchasers of the BRAVO key-cutting machine.
To ensure complete safety for the operator, any job not specified in this manual should be carried out by the manufacturer or in the special Service Centres recommended by Silca.
At the end of the manual there is a list of authorized Service Centre addresses; if the manual was downloaded is necessary visit the website to see the contacts (www.silca.biz).

Silca undertakes to make consumables, optional items and spare parts available for the limited time defined in its product obsolescence policy.

9.1 How to request service

The guarantee attached to BRAVO key-cutting machines ensures free repairs or replacements of faulty parts within 24 months of purchase. All other service calls must be arranged by the customer with Silca or with a Silca service centre.

Copyright Silca 2021

VITTORIO VENETO 24/03/2011

CE DECLARATION OF MACHINE COMPLIANCE

SILCA S.p.A. - VIA PODGORA 20 (Z.I.)
31029 VITTORIO VENETO (TV) - (ITALY)
TEL. 0438 9136 - FAX. 0438 913800

Declares under its own responsibility that the **Key-cutting machine** model

BRAVO EVOLUTION

complies with the requirements of the following European Directives:

European Union **DIRECTIVE 2006/42/CE** (Machines)
and with the EN 292/1 – EN 292/2 Standards

European Union **DIRECTIVE 2004/108/CE** (Electromagnetic Compatibility)
and with the EN 55014-1:2000 + A1:2001 / EN 61000 – 3 – 2 :2000
EN 61000 – 3 – 3:1995 + A1:2001 Standards

European Union **DIRECTIVE 2006/95/CE** (Low Voltage) **| 03 |**
and with the EN 60204-1 (sections 20.2 – 20.3 – 20.4) Standards

Claudio Tomasella of the Silca S.p.A. Research & Development Division is authorized to create a Technical File.

General Manager Basic Production Center

Stefano Setti



VITTORIO VENETO 24/03/2011

CE DECLARATION OF MACHINE COMPLIANCE

SILCA S.p.A. - VIA PODGORA 20 (Z.I.)
31029 VITTORIO VENETO (TV) - (ITALY)
TEL. 0438 9136 - FAX. 0438 913800

Declares under its own responsibility that the **Key-cutting machine** model

BRAVO PROFESSIONAL

complies with the requirements of the following European Directives:

European Union **DIRECTIVE 2006/42/CE** (Machines)
and with the EN 292/1 – EN 292/2 Standards

European Union **DIRECTIVE 2004/108/CE** (Electromagnetic Compatibility)
and with the EN 55014-1:2000 + A1:2001 / EN 61000 – 3 – 2 :2000
EN 61000 – 3 – 3:1995 + A1:2001 Standards

European Union **DIRECTIVE 2006/95/CE** (Low Voltage) **| 03 |**
and with the EN 60204-1 (sections 20.2 – 20.3 – 20.4) Standards

Claudio Tomasella of the Silca S.p.A. Research & Development Division is authorized to create a Technical File.

General Manager Basic Production Center

Stefano Setti



VITTORIO VENETO 24/03/2011

CE DECLARATION OF MACHINE COMPLIANCE

SILCA S.p.A. - VIA PODGORA 20 (Z.I.)
31029 VITTORIO VENETO (TV) - (ITALY)
TEL. 0438 9136 - FAX. 0438 913800

Declares under its own responsibility that the **Key-cutting machine** model

BRAVO SOFER 2P

complies with the requirements of the following European Directives:

European Union **DIRECTIVE 2006/42/CE** (Machines)
and with the EN 292/1 – EN 292/2 Standards

European Union **DIRECTIVE 2004/108/CE** (Electromagnetic Compatibility)
and with the EN 55014-1:2000 + A1:2001 / EN 61000 – 3 – 2 :2000
EN 61000 – 3 – 3:1995 + A1:2001 Standards

European Union **DIRECTIVE 2006/95/CE** (Low Voltage) **| 03 |**
and with the EN 60204-1 (sections 20.2 – 20.3 – 20.4) Standards

Claudio Tomasella of the Silca S.p.A. Research & Development Division is authorized to create a Technical File.

General Manager Basic Production Center

Stefano Setti

